INOX PLUS

Петрикань, 17
тел.: 0 22 317 318
моб.: 0 79 317 888
e-mail: office@inoxplus.md
web: www.inoxplus.md

Выгодно, качественно и надежно

Flow equipment

Mastering Purity

Соединительная и регулирующая арматура.

Соединительная арматура для пищевой, молочной, фармацевтической и питьевой промышленности.

SANITARI FITTINGS for the food, dairy, beverage & pharmaceutical industry

Соединительная арматура DIN SANITARI FITTINGS DIN .....page 5-22

Соединительная арматура SMS SANITARI FITTINGS SMS. ...page 23-36

Люки, крышки и комплектующие.TANK MANHOLES, LIDS & ACCESSORIES..page 37-44

FITTINGS for general industrial use
RACCORDERIA per generali uso industriale

Фланцы FLAGES.....page 45-49

Сварные фитинги BUTT WELDING FITTINGS. .....page 50-56

Регулирующая арматура VALVES. .....page 57-62

Фитинги BSP BSP FITTINGS.....page 63-67

Быстроразъемные соединения QUICK COUPLINGS. .....page 68-70

INOX PLUS
Петрикань, 17
тел.: 0 22 317 318
моб.: 0 79 317 888
e-mail: office@inoxplus.md
web: www.inoxplus.md

Соединительная арматура DIN — Sanitary fittings DIN

INOX PLUS
Петрикань, 17
тел.: 0 22 317 318
моб.: 0 79 317 888
e-mail: office@inoxplus.md
web: www.inoxplus.md

DIN

Резьбовой штуцер приварной — Welding Male

1F001

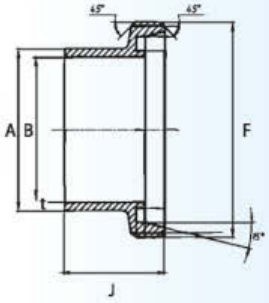

DN	F	A	B	J	t
mm	mm	mm	mm	mm	mm
10	27,6	12	9	21	1,5
15	33,6	18	15	21	1,5
20	43,5	22	19	24	1,5
25	51,5	28	25	29	1,5
32	57,3	34	31	32	1,5
40	64,5	40	37	33	1,5
50	77,5	52	49	35	1,5
60	84,5	61	57	36	2
65	94,5	70	66	40	2
80	109,5	85	81	45	2
100	129,5	104	100	54	2
125	159,3	129	125	46	2
150	189,3	154	150	50	2

Конический штуцер приварной — Welding Liner

1F002

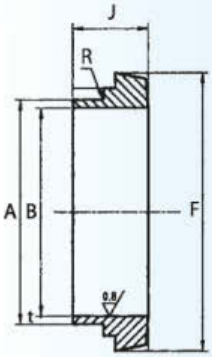

DN	A	B	F	J	t
mm	mm	mm	mm	mm	mm
10	12	9	22	17	1,5
15	18	15	28	17	1,5
20	22	19	36	18	1,5
25	28	25	44	22	1,5
32	34	31	50	25	1,5
40	40	37	56	26	1,5
50	52	49	68	28	1,5
60	61	57	76	30	2
65	70	66	86	32	2
80	85	81	100	37	2
100	104	100	121	44	2
125	129	125	150	34	2
150	154	150	176	37	2

Гайка накидная — Nut

1F003

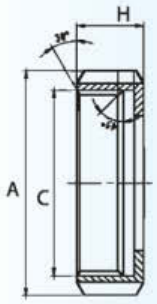

DN	C	A	H
mm	mm	mm	mm
10	28x1/8	38	18
15	34x1/8	44	18
20	44x1/6	54	21
25	52x1/6	63	21
32	58x1/6	70	21
40	65x1/6	78	21
50	78x1/6	92	22
60	85x1/6	99	22
65	95x1/6	112	25
80	110x1/4	127	30
100	130x1/4	148	31
125	160x1/4	178	35
150	190x1/4	210	40

Уплотнение — Seal Ring

1F004

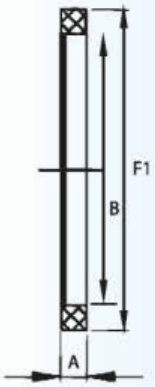

DN	F1	B	A
mm	mm	mm	mm
10	20	12	5
15	26	18	5
20	33	23	5
25	40	30	5
32	46	36	5
40	52	42	5
50	64	54	5
60	72	62	5
65	81	71	5
80	95	85	5
100	114	104	6
125	142	129	7
150	167	155	7

Material : Silicon, Viton, EPDM, NBR

INOX PLUS
Петрикань, 17
тел.: 0 22 317 318
моб.: 0 79 317 888
e-mail: office@inoxplus.md
web: www.inoxplus.md

DIN

Резьбовой штуцер редукционный — Expanding Male

1F005

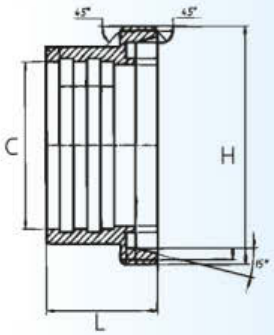

DN	H	C	L
mm	mm	mm	mm
10	27,6	12,2	21
15	33,6	18,2	21
20	43,5	22,2	24
25	51,5	28,2	29
32	57,5	34,2	32
40	64,5	40,2	33
50	77,5	52,2	35
60	85	60,3	37
65	94,5	70,3	40
80	109,5	85,3	45
100	129,5	101,9	54
100	129,5	104,3	54

Конический штуцер редукционный — Expanding Liner

1F006

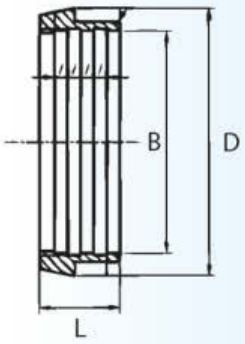

DN	D	B	L
mm	mm	mm	mm
10	22	12,2	17
15	28	18,2	17
20	36	22,2	18
25	44	28,2	22
32	50	34,2	25
40	56	40,2	26
50	68	52,2	28
60	76	60,3	30
65	86	70,3	32
80	100	85,3	37
100	121	101,9	44
100	121	104,3	44

Гайка глухая с цапфой — Blind Nut

1F007

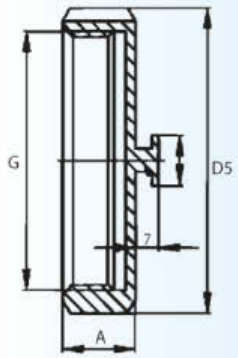

DN	G	D5	A
mm	mm	mm	mm
10	28x1/8	38	18
15	34x1/8	44	18
20	44x1/6	54	20
25	52x1/6	63	21
32	58x1/6	70	21
40	65x1/6	78	21
50	78x1/6	92	22
60	85x1/6	99	22
65	95x1/6	110	25
80	110x1/4	125	29
100	130x1/4	146	31

Гайка глухая с цепочкой и прокладкой — Blind Nut with Boss, Seal and Chain

1F008

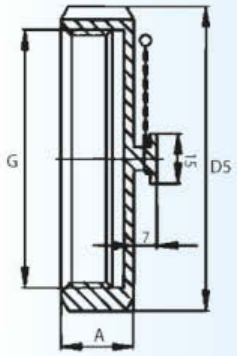

DN	G	D5	A
mm	mm	mm	mm
15	34x1/8	44	18
20	44x1/6	54	20
25	52x1/6	63	21
32	58x1/6	70	21
40	65x1/6	78	21
50	78x1/6	92	22
60	85x1/6	99	22
65	95x1/6	110	25
80	110x1/4	125	29
100	130x1/4	146	31
125	160x1/4	178	35
150	190x1/4	210	40

Петрикань, 17
тел.: 0 22 317 318
моб.: 0 79 317 888
e-mail: office@inoxplus.md
web: www.inoxplus.md

DIN

Отвод 90° — Welding Bend 90°

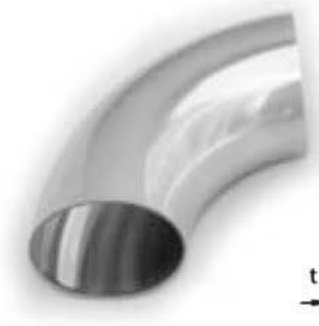

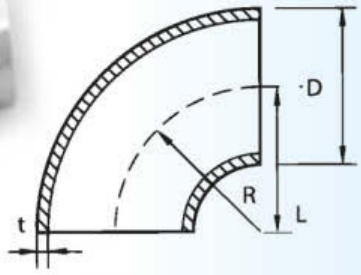

1F009

DN	D	t	R	L
mm	mm	mm	mm	mm
10	12	1,5	26	26
15	18	1,5	35	35
20	22	1,5	40	40
25	28	1,5	50	50
32	34	1,5	55	55
40	40	1,5	60	60
50	52	1,5	70	70
60	60	1,5	75	72
65	70	2	80	80
80	85	2	90	90
100	104	2	100	100
125	129	2	187	187
150	154	2	225	225

Удлиненный отвод 90° — Expanding Bend 90°

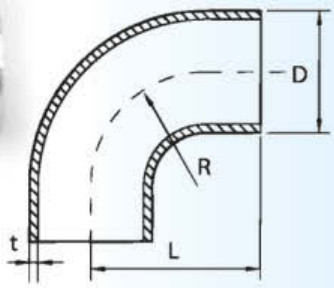

1F010

DN	D	t	R	L
mm	mm	mm	mm	mm
15	18	1,5	35	47
20	22	1,5	40	52
25	28	1,5	50	70
32	34	1,5	53	78
40	40	1,5	60	85
50	52	1,5	70	97
60	60	1,5	75	110
65	70	2	80	110
80	85	2	90	118
100	101,6	2	100	140
100	104	2	100	140

Колено 180° — Welding Bend 180°

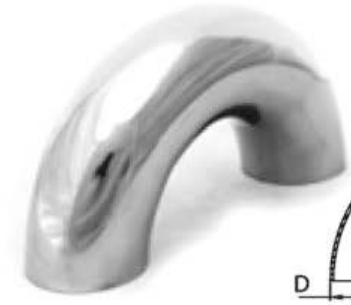

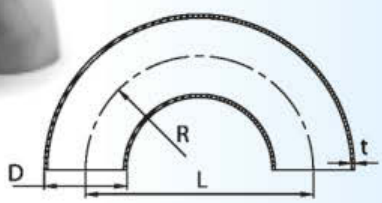

1F011

DN	L	D	R	t
mm	mm	mm	mm	mm
15	70	18	35	1,5
20	80	22	40	1,5
25	100	28	50	1.5
32	110	34	55	1,5
40	120	40	60	1,5
50	140	52	70	1,5
65	160	70	80	2
80	180	85	90	2
100	200	104	100	2

Отвод 45° — Expanding Bend 45°

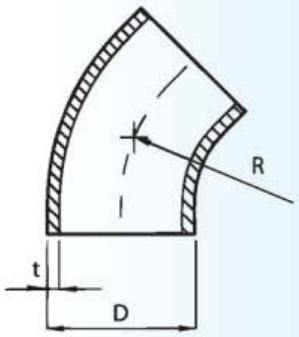

1F012

DN	D	t	R
mm	mm	mm	mm
25	28	1,5	50
32	34	1,5	55
40	40	1,5	60
50	52	1,5	70
60	60	1,5	75
65	70	2	80
80	85	2	90
100	104	2	100
125	129	2	187
150	154	2	225

INOX PLUS
Петрикань, 17
тел.: 0 22 317 318
моб.: 0 79 317 888
e-mail: office@inoxplus.md
web: www.inoxplus.md

DIN

Т-деталь — Welding Tee

1F013

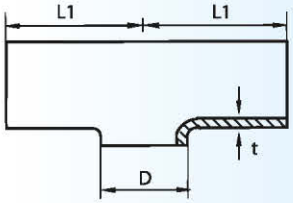

DN	D	t	L1
mm	mm	mm	mm
25	28	1,5	50
32	34	1,5	55
40	40	1,5	60
50	52	1,5	70
60	60	1,5	85
65	70	2	80
80	85	2	90
100	104	2	100
125	129	2	187
150	154	2	225

Т-деталь (длинный) — Equal Tee Expanding

1F014

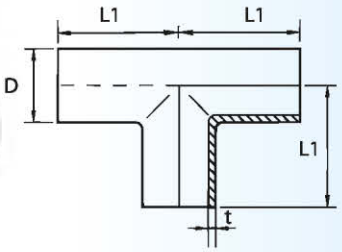

DN	D	t	L1
mm	mm	mm	mm
10	12	1,5	26
15	18	1,5	35
20	22	1,5	40
25	28	1,5	50
32	34	1,5	55
40	40	1,5	60
50	52	1,5	70
60	60	1,5	75
65	70	2	80
80	85	2	90
100	104	2	100
125	129	2	187

Т-деталь (редукционный) — Welding Tee Reduced Dimension

1F015

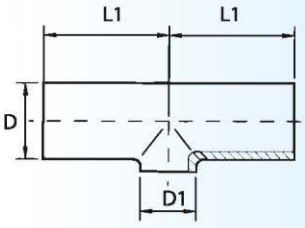

DN	D	D1	L1
32	34	28	55
40	40	34	60
50	52	40	70
65	70	52	80
80	85	70	90
100	101,6	85	150
100	104	85	100
32	34	22	55
40	40	28	60
50	52	34	70
65	70	40	80
80	85	52	90
100	104	70	100

Редукция симметричная — Welding Concentric Reducer

1F016

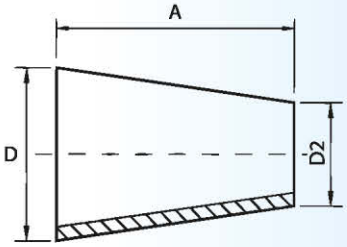

DN	DN1	A	D	D2
mm	mm	mm	mm	mm
20	15	7	22	18
25	20	11	28	22
32	25	11	34	28
40	32	11	40	34
50	40	22	52	40
65	50	29	70	52
80	65	27	85	70
100	80	34	104	85
40	25	22	40	28
50	32	33	52	34
65	40	51	70	40
80	50	56	85	52
100	65	61	104	70
50	25	44	52	28
65	32	62	70	34
80	40	78	85	40
100	50	90	104	52
125	100	45	129	104
150	125	45	154	129
150	100	90	154	104

INOX PLUS
Петрикань, 17
тел.: 0 22 317 318
моб.: 0 79 317 888
e-mail: office@inoxplus.md
web: www.inoxplus.md

DIN

Редукция симметричная длинная — Expanding Concentric Reducer

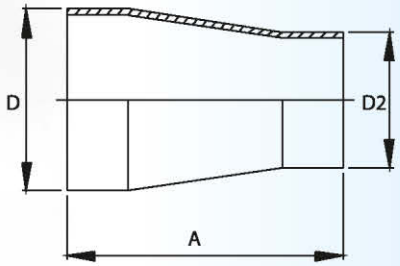

1F017

DN	DN1	A	D	D2
mm	mm	mm	mm	mm
20	15	60	22	18
25	20	80	28	22
32	25	102	34	28
40	32	115	40	34
50	40	125	52	40
65	50	140	70	52
80	65	160	85	70
100	80	150	104	85
32	20	80	34	22
25	15	60	28	18
40	25	88	40	28
50	32	113	52	34
65	40	130	70	40
80	50	120	85	52
100	65	120	104	70
40	20	102	40	22
50	25	129	52	28
65	32	120	70	34
80	40	125	85	40
100	50	127	104	52

Редукция эксцентричная короткая — Welding Eccentric Reducer

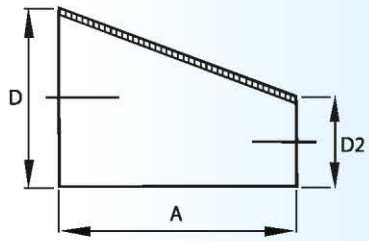

1F018

DN	DN1	A	D	D2
mm	mm	mm	mm	mm
20	15	7	22	18
25	20	11	28	22
32	25	11	34	28
40	32	11	40	34
50	40	22	52	40
65	50	29	70	52
80	65	27	85	70
100	80	34	104	85
25	15	18	28	18
40	25	22	40	28
50	32	33	52	34
65	40	51	70	40
80	50	56	85	52
100	65	61	104	70
50	25	44	52	28

Редукция эксцентричная длинная — Expanding Eccentric Reducer

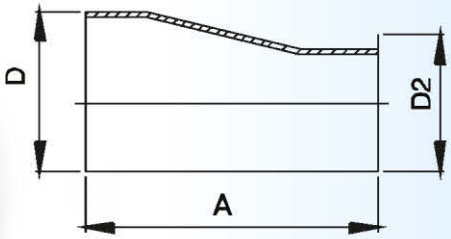

1F019

DN	DN1	A	D	D2
mm	mm	mm	mm	mm
20	15	60	22	18
25	20	80	28	22
32	25	102	34	28
40	32	115	40	34
50	40	125	52	40
65	50	140	70	52
80	65	160	85	70
100	80	150	104	85
25	15	60	28	18
40	25	88	40	28
50	32	113	52	34
65	40	130	70	40
80	50	120	85	52
100	65	120	104	70
50	25	129	52	28

Крестовина — Welding Cross

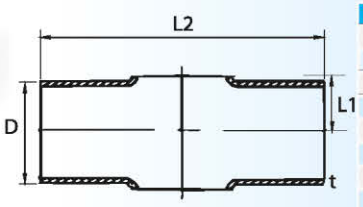

1F020

DN	L2	L1	D	t
mm	mm	mm	mm	mm
25	100	15,5	28	1,5
32	110	19	34	1,5
40	120	22	40	1,5
50	140	28,5	52	1,5
65	160	39,5	70	2
80	180	46,5	85	2
100	200	58	104	2

INOX PLUS
Петрикань, 17
тел.: 0 22 317 318
моб.: 0 79 317 888
e-mail: office@inoxplus.md
web: www.inoxplus.md

DIN

Трубный фильтр 90° — 90° Filter Welding Ends

1F021

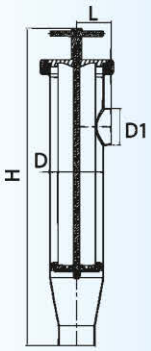

DN	D1	H	D	L
mm	mm	mm	mm	mm
25	28	425	85	77,5
32	34	425	85	77,5
40	40	425	85	77,5
50	52	425	85	77,5
65	70	565	102	101
80	85	585	114	107
100	104	700	154	127

Сито для трубного фильтра 90° — Sieve for 90° Filter Welding Ends

1F022

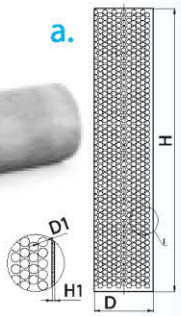

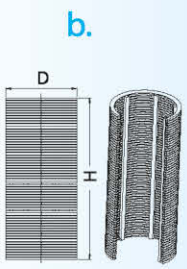

DN	D	H	D1	H1
mm	mm	mm	mm	mm
25	58	270	0,5-1-2	1
32	58	270	0,5-1-2	1
40	58	270	0,5-1-2	1
50	58	270	0,5-1-2	1
65	72	312	0,5-1-2	1
80	78	350	0,5-1-2	1,2
100	105	469	0,5-1-2	1,5

Трубный фильтр - прямой — Line Filter Welding Ends

1F023

DN	D	H
mm	mm	mm
25	28	405
32	34	405
40	40	405
50	52	405
65	70	485
80	85	534
100	104	640

Сито для фильтра — Sieve for Line Filter Welding Ends

1F024

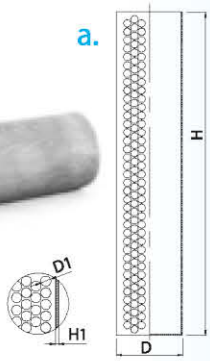

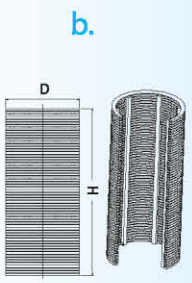

DN	D	H	D1	H1
mm	mm	mm	mm	mm
25	58	270	0,5-1	1,2
32	58	270	0,5-1	1,2
40	58	270	0,5-1	1,2
50	58	270	0,5-1	1,2
65	69	350	0,5-1	1,2
80	90	365	0,5-1	1,2
100	110	450	0,5-1	1,5

INOX PLUS
Петрикань, 17
тел.: 0 22 317 318
моб.: 0 79 317 888
e-mail: office@inoxplus.md
web: www.inoxplus.md

DIN

Трубный фильтр G-G 45 — 45° «Y» Filter Welding Ends

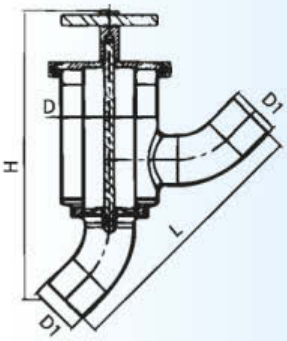

DN	H	L	D1	D
mm	mm	mm	mm	mm
25	275	204	28	102
32	288	226	34	102
40	288	242	40	102
50	312	280	52	102
65	390	362	70	114
80	405	406	85	114
100	565	460	104	154

1F025

Сито для фильтра — Sieve for 45° Y» Filter Welding Ends

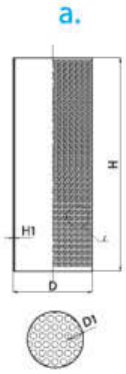

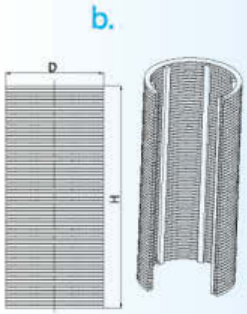

DN	D	H	D1	H1
mm	mm	mm	mm	mm
25	55	146	0,5-1-2	1
32	55	146	0,5-1-2	1
40	55	146	0,5-1-2	1
50	55	146	0,5-1-2	1
65	79	180	0,5-1-2	1
80	79	180	0,5-1-2	1
100	105	297	0,5-1-2	2

1F026

Смотровое стекло с освящением (диопр с подсветкой) — Inspection Glass with Light

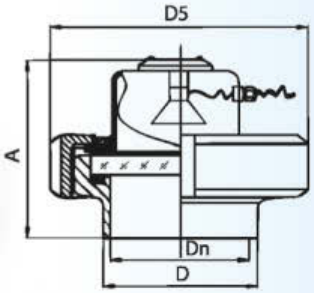

DN	A	D5	D	Dn	Watt	Volt
mm	mm	mm	mm	mm		
80	90	125	87	81	20	24
100	100	146	106	100	50	24
125	90	178	132	125	50	24
150	96	210	157	150	50	24

1F027

Цилиндрическое смотровое стекло (С-С) — Cylinder Sight Glass Welding Ends

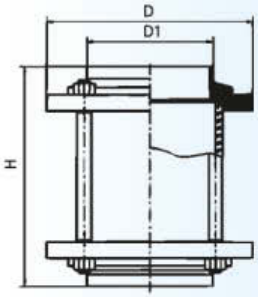

DN	D1	D	H
mm	mm	mm	mm
25	28	78	140
32	34	86	140
40	40	90	140
50	52	102	142
65	70	124	146
80	85	139	150
100	104	154	154

1F028

INOX PLUS
Петрикань, 17
тел.: 0 22 317 318
моб.: 0 79 317 888
e-mail: office@inoxplus.md
web: www.inoxplus.md

Цилиндр. смотровое стекло с резьбой (G-G) — Cylinder Sight Glass Threaded

1F029

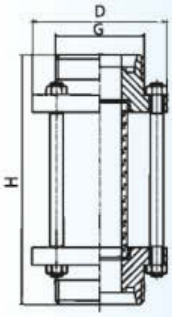

DN	G	D	H
mm	mm	mm	mm
25	28	78	156
32	34	86	160
40	40	90	164
50	52	106	166
65	70	124	170
80	85	139	174
100	104	159	194

Замена стекла (для смотрового стекла) — Replacement Glass for Sight Glass

1F030

DN	D1	D2	L
mm	mm	mm	mm
25	25	33	100
32	32	40	100
40	37	45	100
50	50	60	100
65	66	79	100
80	86	97	100
100	100	120	100

Замена прокладки — Replacement Gasket for Sight Glass

1F031

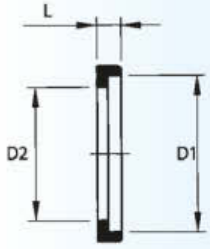

DN	D1	D2	L
mm	mm	mm	mm
25	33	23	7
32	40	32	7
40	45	37	7
50	60	50	7
65	79	66	7
80	97	86	8
100	120	100	8

Смотровое стекло (сварное) диопр гаечный — Inspection Glass Welding

1F032

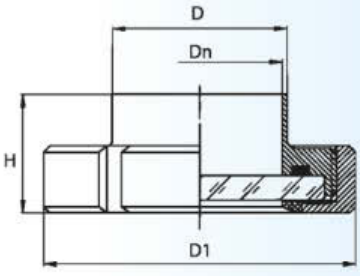

DN	D1	D	H
mm	mm	mm	mm
25	63	28	29
32	70	34	31
40	78	40	33
50	92	52	35
65	112	70	40
80	127	85	45
100	148	104	54

Петрикань, 17
тел.: 0 22 317 318
моб.: 0 79 317 888
e-mail: office@inoxplus.md
web: www.inoxplus.md

DIN

Заменное стекло (для диопра) — Replacement Glass for Inspection Glass

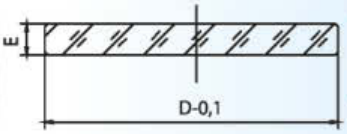

DN	D	E
mm	mm	mm
25	40	8
32	45	10
40	55	10
50	64,3	10
65	84	10
80	95	12
100	114	12

1F033

Замен. тефлоновая прокладка (для диопра) — Replacement Gasket Teflon for Inspection Glass

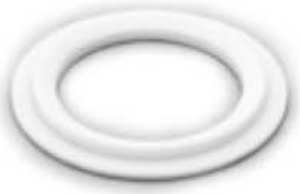

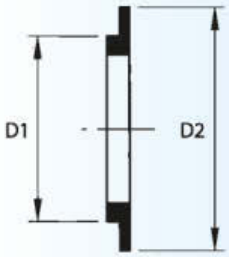

DN	D1	D2
mm	mm	mm
25	34	44
32	40	50
40	47	57
50	62	73
65	80	91
80	94	103
100	115	123

1F034

Гиланговая надставка (коническое) — Liner Hose Holder

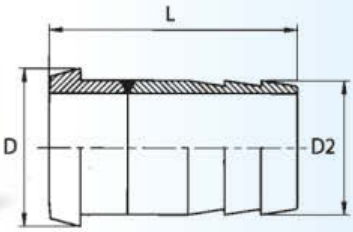

DN	D	D2	L
mm	mm	mm	mm
20	36	20	66
25	44	25	72
32	50	35	82
40	56	40	86
50	58	50	93
60	76	60	102
65	86	70	109
80	100	80	117
100	121	100	130

1F035

Гиланговая надставка (резьбовое) — Male Part Hose Holter

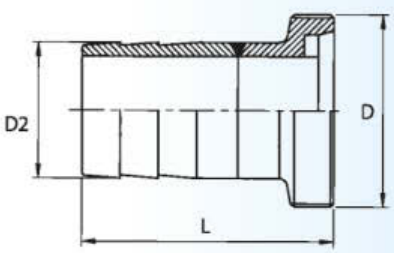

DN	D2	D	L
mm	mm	mm	mm
20	20	44	72
25	25	52	79
32	35	58	89
40	40	65	93
50	50	78	100
60	60	85	107
65	70	95	117
80	80	110	125
100	100	130	140

1F036

Петрикань, 17
тел.: 0 22 317 318
моб.: 0 79 317 888
e-mail: office@inoxplus.md
web: www.inoxplus.md

Универсальный ключ для фитингов — Universal Key for Pipe Fittings

1F037

Хамут — Pipe Clamp Ring

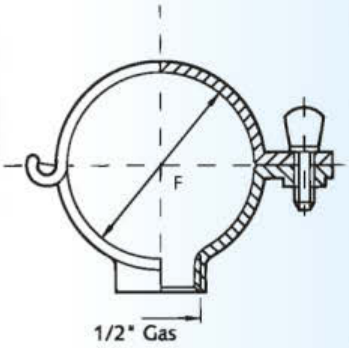

1F038

DN	F
mm	mm
10	12
15	18
20	22
25	28
32	34
40	40
50	52
60	60
65	70
80	85
100	101,6

Хамут для трубы со стержнем — Pipe Clamp with Tube

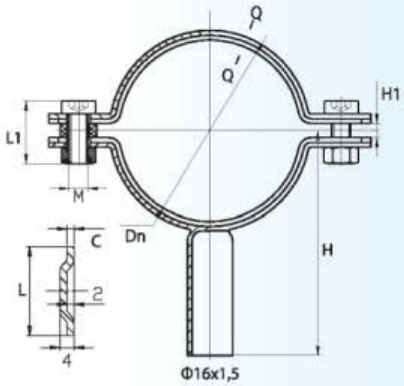

1F039

DN	Dn	H	H1	M-L1	L	C
mm	mm	mm	mm	mm	mm	mm
20	19	62,5	8	M8-25	25	1,5
25	25,4	65,7	9	M8-25	25	1,5
32	35	65	9	M8-25	25	1,5
40	38	72	10	M8-30	25	1,5
50	50,8	78,4	10	M8-30	25	1,5
65	70	84	11	M8-30	25	2
80	85	91	12	M8-30	25	2
100	101,6	103,8	12	M8-30	28	2
125	129	117,5	12	M10-40	28	2,5
150	154	130	12	M10-40	28	2,5

Хамут для трубы с гайкой — Pipe Clamp with Nut

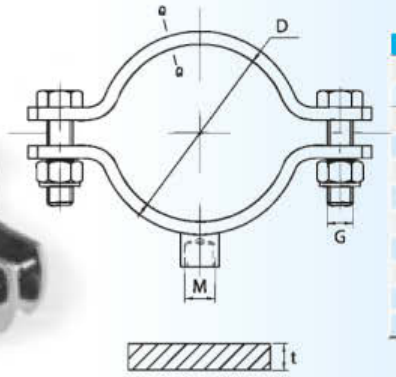

1F040

DN	D	M	t	G
mm	mm	mm	mm	mm
25	28	8	2	M6
32	34	8	2,5	M6
40	40	8	2,5	M6
50	52	8	2,5	M6
65	70	10	2,5	M6
80	85	10	2,5	M6
100	104	10	3	M6
125	129	10	3	M8
150	154	10	3	M8

INOX PLUS
Петрикань, 17
тел.: 0 22 317 318
моб.: 0 79 317 888
e-mail: office@inoxplus.md
web: www.inoxplus.md

Заслонка прямая S-S — Butterfly Valve Welding-Welding Ends with Pull Handle

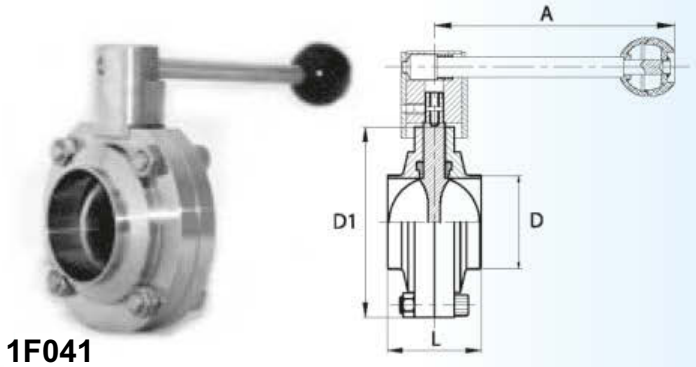

1F041

DN	D	A	L	D1
mm	mm	mm	mm	mm
25	28	130	50	74
32	34	130	50	80
40	40	130	50	86,8
50	52	130	50	106,8
65	70	160	56	123,8
80	85	160	56	138,8
100	104	160	64	158,8
125	129	160	74	190
150	154	200	80	220

Заслонка прямая G-G — Butterfly Valve Male-Male Ends with Pull Handle

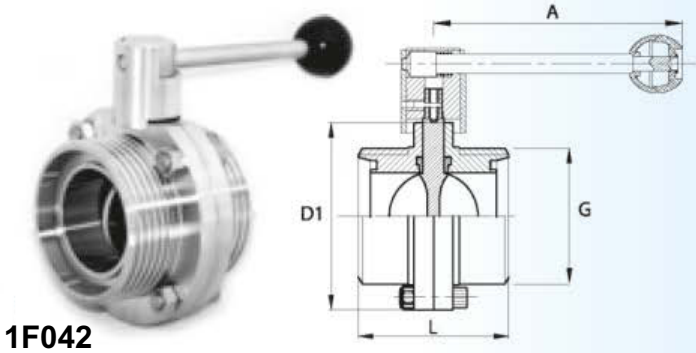

1F042

DN	G	A	L	D1
mm	mm	mm	mm	mm
25	RD52x1/6	130	68	74
32	RD58x1/6	130	68	80
40	RD65x1/6	130	68	86,8
50	RD78x1/6	130	76	106,8
65	RD95x1/6	160	80	123,8
80	RD110x1/4	160	82	138,8
100	RD130x1/4	160	88	158,8

Заслонка прямая M-S — Butterfly Valve Weld-Female Ends with Pull Handle

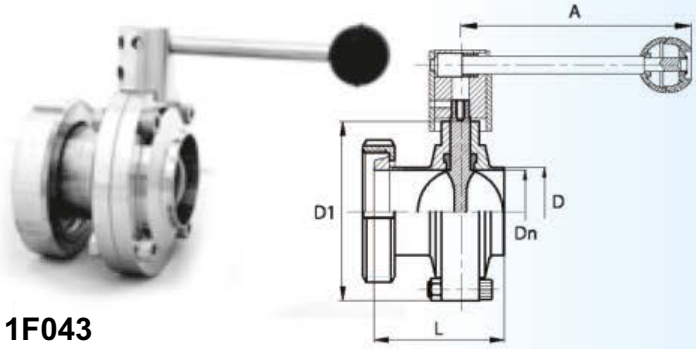

1F043

DN	Dn	D	D1	L	A
mm	mm	mm	mm	mm	mm
25	25	28	74	80	130
32	31	34	80	80	130
40	37	40	86,8	80	130
50	49	52	106,8	80	130
65	66	70	123,8	82	160
80	81	85	138,8	86	160
100	101	104	158,8	94	160

Заслонка прямая M-G — Butterfly Valve Male-Female Ends with Pull Handle

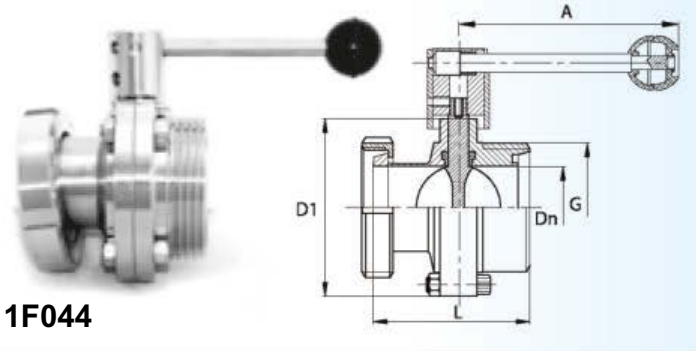

1F044

DN	D	G	D1	L	A
mm	mm	mm	mm	mm	mm
25	25	RD52x1/6	74	89	130
32	31	RD58x1/6	80	89	130
40	37	RD65x1/6	86,8	89	130
50	49	RD78x1/6	106,8	93	130
65	66	RD95x1/6	123,8	96	160
80	81	RD110x1/4	138,8	99	160
100	101	RD130x1/4	158,8	106	160

Петрикань, 17
тел.: 0 22 317 318
моб.: 0 79 317 888
e-mail: office@inoxplus.md
web: www.inoxplus.md

DIN

Рычаг для заслонки — Butterfly Valve Round Type Pull Handle 3 Pos

1F045

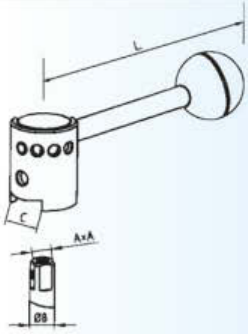

DN	A	B	C	L
mm	mm	mm	mm	mm
25-50	8x8	12	20	130
65-100	10x10	14	22	160
125-150	12x12	15	26	200

Рычаг стандартный для заслонки — Butterfly Valve Square Type Pull Handle 3 Pos

1F046

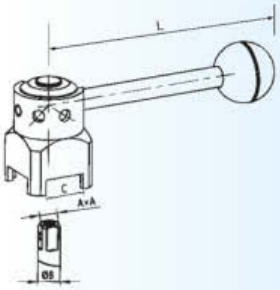

DN	A	B	C	L
mm	mm	mm	mm	mm
25-50	8x8	12	20	130
65-100	10x10	14	22	160
125-150	12x12	15	26	200

Рычаг для заслонки — Butterfly Valve Multi-Position Handle

1F047

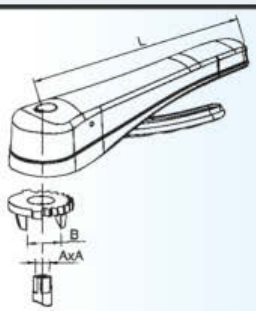

DN	A	B	L
mm	mm	mm	mm
10-40	8x8	20,2	144
50	8x8	22,2	144
65	10x10	22,2	160
80-100	10x10	22,2	160

Рычаг для заслонки (Inox) — Butterfly Valve Stainless Steel Multi-Position Handle

1F048

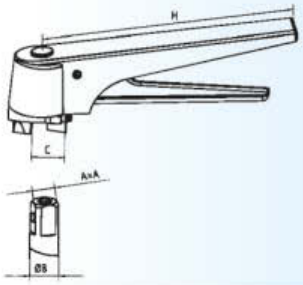

DN	A	B	C	H
mm	mm	mm	mm	mm
25-50	8x8	10,8	20	8x8
65	10x10	11,8	22	10x10
80-100	11x11	14,8	22	10x10

Уплотнение для заслонки — Butterfly Valve Gasket

1F049

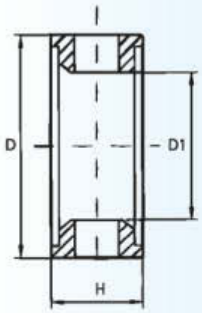

DIN	D	D1	H
mm	mm	mm	mm
25	41,5	25	21,7
32	48,5	31,5	21,5
40	55	38,5	22
50	64,5	49	21,5
65	85	66	27,8
80	103	81	28
100	121,5	100	32

Material: Silicon, Viton, EPDM, NBR

Петрикань, 17
тел.: 0 22 317 318
моб.: 0 79 317 888
e-mail: office@inoxplus.md
web: www.inoxplus.md

DIN

Обратный клапан S-S — Non Return Valve Welding Ends

1F050

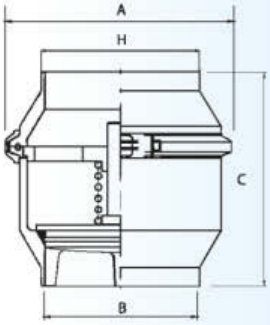

DN	H	A	B	C
mm	mm	mm	mm	mm
25	28	72	25	78
32	34	85,5	31	81
40	40	85,5	37	81
50	52	99	49	90
65	70	127	66	101
80	85	138	81	116
100	104	164	100	156

Обратный клапан G-G — Non Return Valve Male Ends

1F051

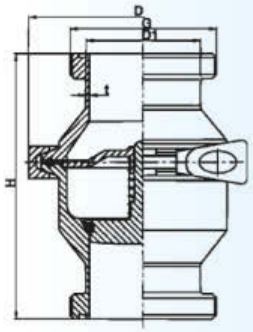

DN	D1	D	H
mm	mm	mm	mm
25	28	72	111,5
32	34	85,5	116,5
40	40	85,5	116,5
50	52	99	130
65	70	127	142,5
80	85	138	155,5
100	104	164	182,5

Регулируемый предохранительный клапан (G-G) — Adjustable Safety Valve Male Ends

1F052

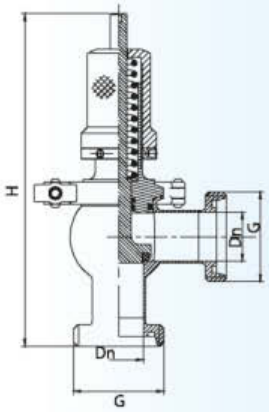

DN	H	G		
mm	mm	mm	bar	m³/h
25	137	51,5x1/6	0-3	10
32	137	57,5x1/6	3-6	12
40	137	64,5x1/6	3-6	15
50	281	77,5x1/6	3-6	20
65	315	94,5x1/6	3-6	35

Пружина для предохр. клапанов — Replacement Spring for Safety Valve

1F053

bar
0-3
0-6
0-10

INOX PLUS
Петрикань, 17
тел.: 0 22 317 318
моб.: 0 79 317 888
e-mail: office@inoxplus.md
web: www.inoxplus.md

Заслонка прямая PN-PN — Butterfly Valve Intermediate Flanged

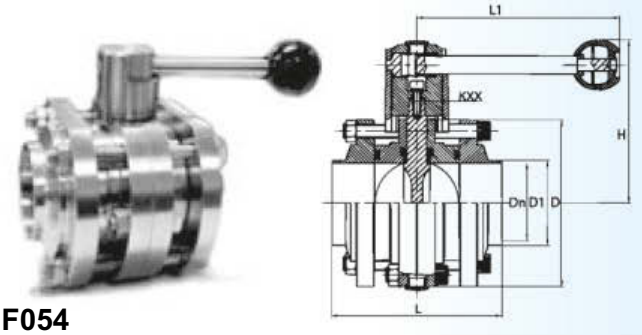

1F054

DN	D1	D	L	L1	H
mm	mm	mm	mm	mm	mm
25	28	74	98	130	86
32	34	80	98	130	86
40	40	87	98	130	92
50	52	107	100	130	102
65	70	124	106	160	111
80	85	139	106	160	121
100	104	159	110	200	131

Шаровый кран G-G — Ball Valve Two Ways with Male Ends

1F055

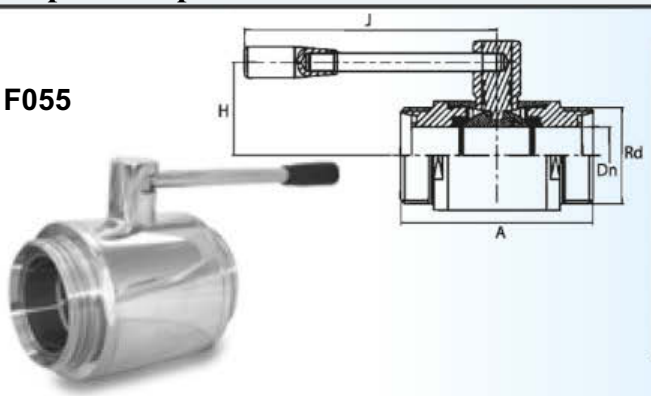

DN	Rd	Dn	J	A	H
mm	mm	mm	mm	mm	mm
10	28x1/8	10	124	95	42
15	34x1/8	15	124	95	42
20	44x1/6	19	124	95	42
25	52x1/6	25	146	100	48
32	58x1/6	31	146	108	50
40	65x1/6	37	185	123	60
50	78x1/6	49	185	136	68
65	95x1/6	66	243	161	85
80	110x1/4	81	243	180	96
100	130x1/4	100	273	204	114

Шаровый кран M-G — Ball Valve Two Ways Female-Male Ends

1F056

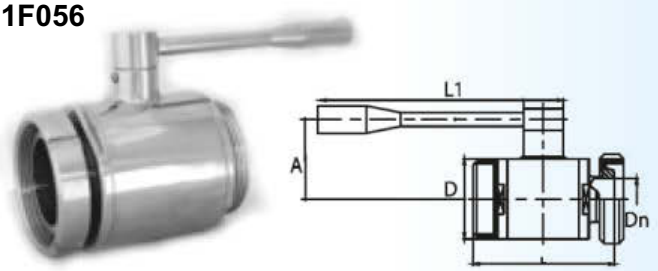

DN	H	Dn	D	L	L1	A
mm	mm	mm	mm	mm	mm	mm
10	28x1/8	10	28	70	75	58
15	34x1/8	15	35	72	82	67
20	44x1/6	20	40	65	82	70
25	52x1/6	25	50	96	98	75
32	58x1/6	32	62	104	120	101
40	65x1/6	36	70	124	120	101
50	78x1/6	50	88	127	153	125
65	95x1/6	66	114	153	190	158
80	110x1/4	76	136	181	248	193
100	130x1/4	98,5	160	198	248	230
125	160x1/4	120	200	262	340	193

Шаровый кран трехходовой G-G-G — Ball Valve Three Ways with Male Ends

1F057

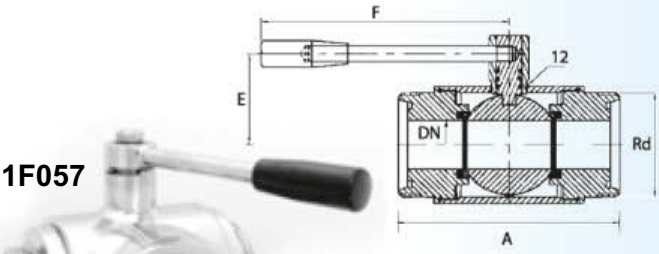

DN	Rd	A	F	E
mm	mm	mm	mm	mm
10	28	108	110	60
15	34	118	110	65
20	44	130	160	70
25	52	140	160	80
32	58	156	190	95
40	65	172	190	110
50	78	182	235	120
65	95	196	285	130
80	110	256	310	145
100	130	286	310	160
125	160	326	350	180

INOX PLUS
Петрикань, 17
тел.: 0 22 317 318
моб.: 0 79 317 888
e-mail: office@inoxplus.md
web: www.inoxplus.md

DIN

Обойма кламп — CLAMP Ring Finger Nut

1F058

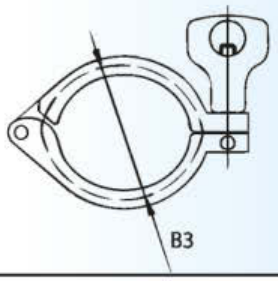

DN	B3
mm	mm
20	37
25	53
32	53
40	53
50	67
65	94
80	109
100	122

Потрубок длинный — CLAMP Ferrule Long

1F059

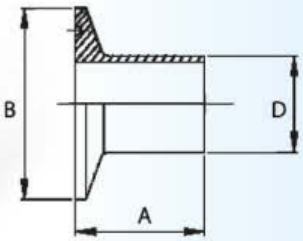

DN	B	D	A
mm	mm	mm	mm
20	34	22	18
25	50,5	28	21,5
32	50,5	34	21,5
40	50,5	40	21,5
50	64	52	28
65	91	70	28
80	106	85	28
100	119	104	28

Потрубок короткий — CLAMP Ferrule Short

1F060

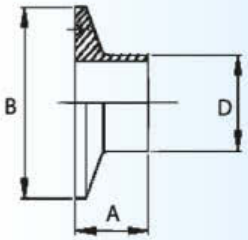

DN	B	D	A
mm	mm	mm	mm
20	34	22	12,7
25	50,5	28	12,7
32	50,5	34	12,7
40	50,5	40	12,7
50	64	52	12,7
65	91	70	12,7
80	106	85	12,7
100	119	104	12,7

Заглушка — CLAMP End Cap

1F061

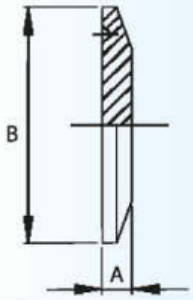

DN	B	A
mm	mm	mm
20	34	6,3
25	50,5	6,3
32	50,5	6,3
40	50,5	6,3
50	64	6,3
65	91	6,3
80	106	6,3
100	119	6,3

Прокладка хомута — Gasket CLAMP

1F062

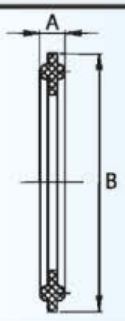

DN	B	A
mm	mm	mm
20	34	5
25	50,5	5
32	50,5	5,5
40	50,5	5,5
50	64	5,5
65	91	5,5
80	106	5,5
100	119	5,5

Material : Silicon, Viton, EPDM, Teflon

INOX PLUS
Петрикань, 17
тел.: 0 22 317 318
моб.: 0 79 317 888
e-mail: office@inoxplus.md
web: www.inoxplus.md

Люки, крышки и комплектующие — Tank Manholes, Lids & Accessories

Петрикань, 17
тел.: 0 22 317 318
моб.: 0 79 317 888
e-mail: office@inoxplus.md
web: www.inoxplus.md

Люк круглый Ø 220 мм — Round Lid ϕ 220mm reverse and side opening

3F001

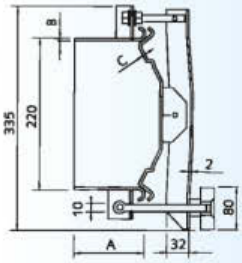

Amm	Bmm	Cmm	Pmax bar	Kg
65	2	1.2	0.3	2.4
100	2	1.2	0.3	2.8

0,3 bar Max pressure • Pressione massima

AISI 304+316

Люк круглый Ø 300 мм — Round Lid ϕ 300mm reverse and side opening

3F002

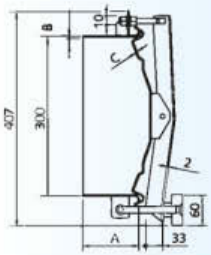

Amm	Bmm	Cmm	Pmax bar	ΒΑΡΟΣ
65	2	1.2	0.2	3.1
100	2	1.2	0.2	3.6

0,2 bar Max pressure • Pressione massima

AISI 304+316

Люк круглый Ø 400 мм — Round Lid ϕ 400mm reverse and side opening

3F003

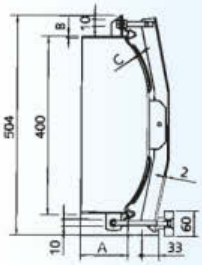

Amm	Bmm	Cmm	Pmax bar	ΒΑΡΟΣ
65	2	1.5	0.2	5.4
100	2	1.5	0.2	6.1

0,2 bar Max pressure • Pressione massima

AISI 304+316

Люк круглый Ø 500 мм — Round Lid ϕ 500mm reverse and side opening

3F004

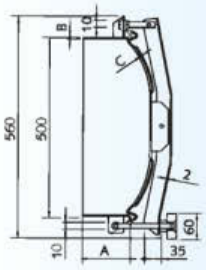

Amm	Bmm	Cmm	Pmax bar	ΒΑΡΟΣ
65	2	1.5	0.2	8.7
100	2	1.5	0.2	9.6

0,2 bar Max pressure • Pressione massima

AISI 304+316

Люк круглый Ø 400 мм — Round Lid ϕ 400mm reverse and side opening

3F005

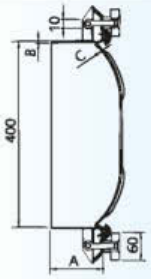

Amm	Bmm	Cmm	Pmax bar	ΒΑΡΟΣ
65	2	1.5	0.2	5.2
100	2	1.5	0.2	5.9

0,2 bar Max pressure • Pressione massima

AISI 304+316

Петрикань, 17
тел.: 0 22 317 318
моб.: 0 79 317 888
e-mail: office@inoxplus.md
web: www.inoxplus.md

Люк овальный 450x320мм (открытие внутри) — Oval Manhole 450x320mm inward opening

3F006

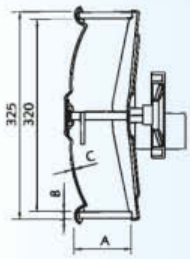

Amm	Bmm	Cmm	Pmax bar	ΒΑΡΟΣ
60	6	1.5	3	7
80	6	1.5	3	8.1
60	8	1.5	3	8.1
80	8	1.5	3	9.7

3 bar Max pressure • Pressione massima

AISI 304 + 316

Люк круглый — Round Manhole ϕ 400mm outward opening

3F007

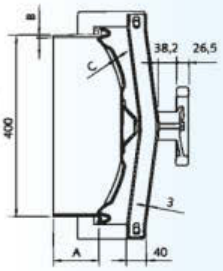

Amm	Bmm	Cmm	Pmax bar	ΒΑΡΟΣ
100	2	1.5	0.5	7.8
100	3	1.5	0.5	9.2
100	3	2	0.7	10.5

0,5 bar Max pressure • Pressione massima

AISI 304 + 316

Люк прямоугольный — Rectangular Manhole 420x530mm outward opening

3F008

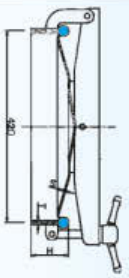

Hmm	Tmm	Smm	Pmax bar	ΒΑΡΟΣ
60	8	2	0.6	17.8
100	8	2	0.6	22.2
60	10	2	0.6	19.5
100	10	2	0.6	25

0,6 - 0,8 bar Max pressure • Pressione massima

AISI 304 + 316

Люк прямоугольный — Rectangular Manhole 530x420mm outward opening

3F009

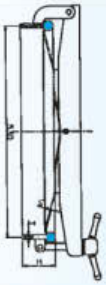

Hmm	Tmm	Smm	Pmax bar	ΒΑΡΟΣ
60	8	2	0.5	18.8
100	8	2	0.5	23.2
60	10	2	0.5	20.4
100	10	2	0.5	26

0,5 - 0,7 bar Max pressure • Pressione massima

AISI 304 + 316

Люк прямоугольный — Rectangular Manhole 318x420mm outward opening

3F010

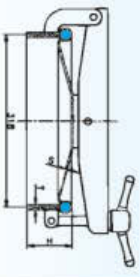

Hmm	Tmm	Smm	Pmax bar	ΒΑΡΟΣ
60	8	2	1	14
100	8	2	1	17.3
60	10	2	1	15.2
100	10	2	1	19.4

1 bar Max pressure • Pressione massima

AISI 304 + 316

Петрикань, 17
тел.: 0 22 317 318
моб.: 0 79 317 888
e-mail: office@inoxplus.md
web: www.inoxplus.md

Люк прямоугольный — Rectangular Manhole 420x318mm outward opening

3F011

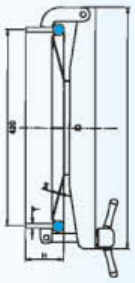

H mm	T mm	S mm	Pmax bar	ВАРОΣ
60	8	2	1	13
100	8	2	1	16.4
60	10	2	1	14.3
100	10	2	1	18.5

1 bar Max pressure • Pressione massima

AISI 304 + 316

Асептический овальный люк (открытие внутри) — Aseptic Oval Manhole 450x320mm inward opening

3F012

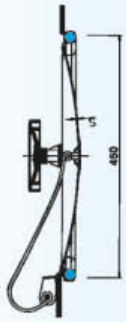

T mm	S mm	Pmax bar	ВАРОΣ
6	1.5	3	7.9
6	1.5	3	9.0
8	1.5	3	9.0
8	1.5	3	10.6

3 bar Max pressure • Pressione massima

AISI 304 + 316

Асептический люк — Aseptic Lid ϕ 400mm revesre and side opening

3F013

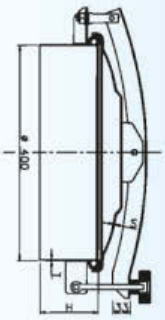

Hmm	Hmm	S mm	Pmax bar	ВАРОΣ
65	2	2	0.2	6.1
100	2	2	0.2	6.8
150	2	2	0.2	7.8
200	2	2	0.2	8.8

0,2 bar Max pressure • Pressione massima

AISI 304 + 316

Асептический люк — Aseptic Lid ϕ 500mm

3F014

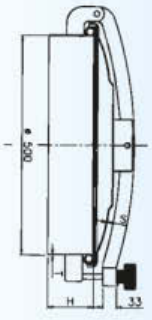

Hmm	T mm	S mm	Pmax bar	Peso kg Weight
65	2	2	0.2	12.3
100	2	2	0.2	13.2

0.2 bar Max pressure • Pressione massima

AISI 304 + 316

Петрикань, 17
тел.: 0 22 317 318
моб.: 0 79 317 888
e-mail: office@inoxplus.md
web: www.inoxplus.md

Кран нижний для уровномера — Lower Gauge Cock

3F015

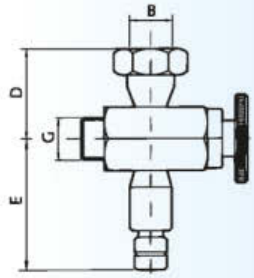

DN	G	B	C	D
mm	inch	mm	mm	mm
15	3/8	14	46	61
15	3/8	15	46	61
15	3/8	16	46	61
15	3/8	20	46	61
15	1/2	14	46	61
15	1/2	15	46	61
15	1/2	16	46	61
15	1/2	20	46	61
15	1/2	24	61	61

AISI 304 + 316

Кран верхний для уровномера — Upper Level Gauge Cock

3F016

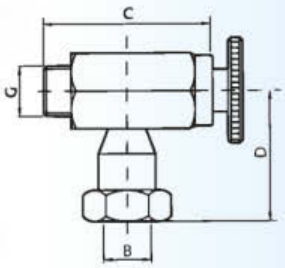

DN	G	B	C	D
mm	inch	mm	mm	mm
15	3/8	14	68	56
15	3/8	15	68	56
15	3/8	16	68	56
15	3/8	20	68	56
15	1/2	14	68	56
15	1/2	15	68	56
15	1/2	16	68	56
15	1/2	20	68	56
15	1/2	24	68	61

AISI 304 + 316

Re-entry Gauge Cock

3F017

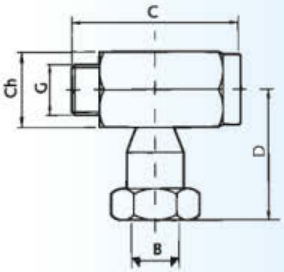

DN	G	B	C	D	ch
mm	inch	mm	mm	mm	mm
15	3/8	14	68	56	30
15	3/8	15	68	56	30
15	3/8	16	68	56	30
15	3/8	20	68	56	30
15	1/2	14	68	56	30
15	1/2	15	68	56	30
15	1/2	16	68	56	30
15	1/2	20	68	56	30
15	1/2	24	68	61	30

AISI 304 + 316

Кран для отбора проб — Sampling Cock

3F018

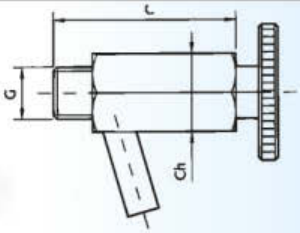

DN	G	C	ch
mm	inch	mm	mm
15	3/8	56	24
15	1/2	56	24

AISI 304 + 316

Шаровый кран — Ball Valve Female Gas - Garolla

3F019

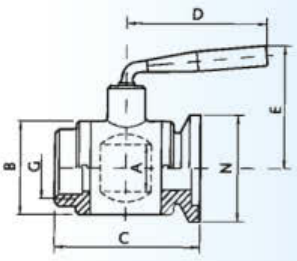

DN	G	GAROLLA	N	A	B	C	D	E
mm	inch	mm	mm	mm	mm	mm	mm	mm
32	1¼	40	65	36	62	100	120	101
40	1½	40	65	36	62	100	120	101
40	1½	50	75	45	78	115	153	120
50	2	50	75	45	78	115	153	120
50	2	60	86	50	90	128	153	125
65	2½	70	98	66	114	160	190	158
80	3	80	108	76	133	170	248	193
100	4	100	128	98,5	160	190	248	230
125	5	120	158	120	200	255	340	250

Петрикань, 17
тел.: 0 22 317 318
моб.: 0 79 317 888
e-mail: office@inoxplus.md
web: www.inoxplus.md

Предохранительный клапан Garolla — Safety Valve Garolla End

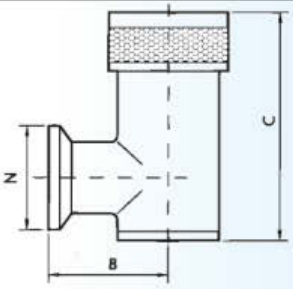

DN	N	B	C
mm	mm	mm	mm
40	65	69	135

3F020

Полиэтиленовый воздушный клапан двойного действия

Polythylene Air Valve Double Acting HI/h-130

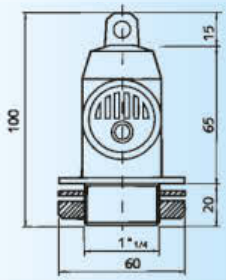

3F021

Полиэтиленовый воздушный клапан двойного действия

Polythylene Air Valve Double Acting HI/h-400

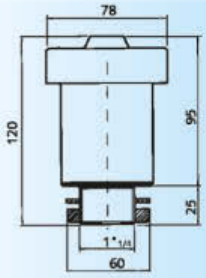

3F022

Клапан сброса давления Moplen DIN резьбовой DN 50 — Pressure Relief Valve Moplen DIN threaded DN 50

3F023

For DN 50 DIN Male — Per DN 50 DIN Femmina

Предохранительный клапан двойного действия — Double Acting Relief Valve Welding

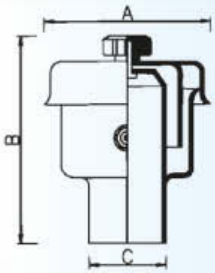

	Ø mm	A mm	B mm	C mm	hl/h
	60	170	185	60	300
	100	210	235	100	1000

AISI 304 + 316

3F024

Диопр гаечный — Inspection Glass Welding

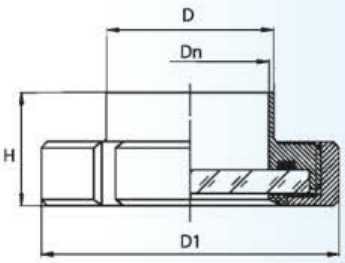

DN	D1	D	H
mm	mm	mm	mm
25	63	28	29
32	70	34	31
40	78	40	33
50	92	52	35
65	112	70	40
80	127	85	45
100	148	104	54

3F025

INOX PLUS
Петрикань, 17
тел.: 0 22 317 318
моб.: 0 79 317 888
e-mail: office@inoxplus.md
web: www.inoxplus.md

Моющая головка — Spray Ball Clip

3F026

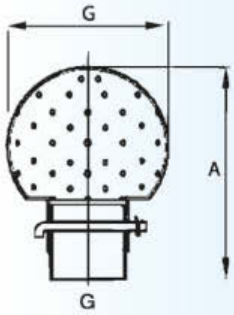

Q	G	A	Fluxation	Cleaning Radius	Pressure
mm	inch	mm	m³/h	m	bar
63	1	95	17	1,00-1,25	2,5
76	11/2	110	23	1,25-1,75	2,5
91	2	125	55	2,00-3,00	3,5
100	21/2	135	58	3,00-3,50	3,5

Моющая головка — Spray Ball Socket

3F027

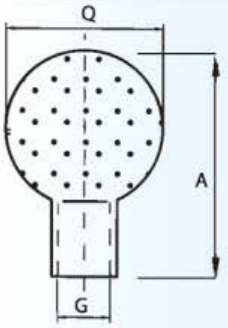

Q	G	A	Fluxation	Cleaning Radius	Pressure
mm	inch	mm	m³/h	m	bar
63	1	72	17	1,00-1,25	2,5
76	11/4	85	23	1,25-1,75	2,5
76	11/2	87	55	1,25-1,75	2,5
91	2	102	58	2,00-3,00	3,5

Ротационная моющая головка — Rotary Cleaning Ball

3F028

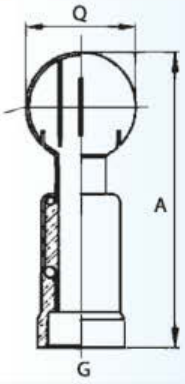

Q	G	A	Fluxation	Cleaning Radius	Pressure
mm	inch	mm	m³/h	m	bar
37	1/2	110	8	0,90	1
53	1	140	12	1,25	2
53	11/4	160	12	1,25	2
63	11/2	170	12	1,25	2
76	2	192	38	1,50	2
91	21/2	220	38	2,00	2

Rotary Cleaner Multi Position Spray

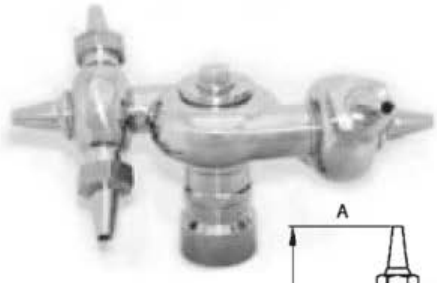

3F029

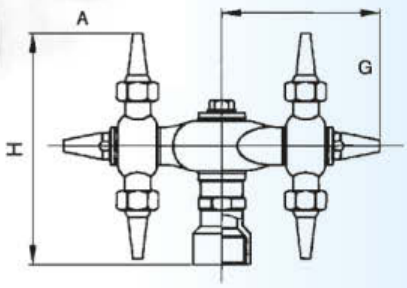

H	G	A	Fluxation	Cleaning Radius	Pressure
mm	inch	mm	m³/h	m	bar
162	1/2	112	15	1-2	0,5-1
165	1	118	23	2-3	1,5-2
189	11/4	142	38	2,5-3	1,8-2,5
189	11/2	142	38	2,5-3	1,8-2,5
191	2	145	60	3,5-4	2,5-3

INOX PLUS
Петрикань, 17
тел.: 0 22 317 318
моб.: 0 79 317 888
e-mail: office@inoxplus.md
web: www.inoxplus.md

Фланцы и сварные фитинги — Flanges & Butt Welding Fittings

Петрикань, 17
тел.: 0 22 317 318
моб.: 0 79 317 888
e-mail: office@inoxplus.md
web: www.inoxplus.md

FLANGES

Фланец PN 10 — Plane Welding Flange PN 10 DIN 2576/EN 1092-1/UNI 2277

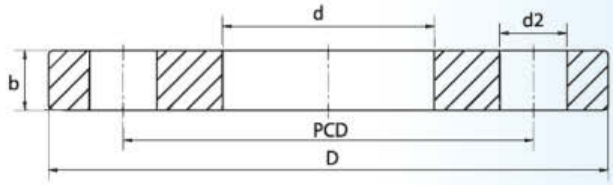

4F001

DN	d1 mm	d mm	D mm	b mm	PCD mm	NoHOLES	THREAD	d2 mm
15	20	21	95	12	65	4	M12	14
	21,3	22						
20	25	26	105	14	75	4	M12	14
	26,9	28						
25	30	31	115	14	85	4	M12	14
	33,7	34						
32	38	39	140	16	100	4	M16	18
	42,4	43						
40	44,5	45,5	150	16	110	4	M16	18
	48,3	49						
50	54	~54	165	18	125	4	M16	18
	57	58,1						
	60,3	62						
65	70	71	185	18	145	4	M16	18
	76,1	77						
80	84	~84	200	20	160	4	M16	18
	88,9	90						
100	104	~104	220	22	180	8	M16	18
	108	109,6						
	114,3	116						
125	129	~129	250	24	210	8	M16	18
	133	134,8						
	139,7	141						
150	154	~154	285	24	240	8	M20	22
	159	161,1						
	168,3	170						
200	204	~204	340	26	295	8	M20	22
	219,1	221						
250	254	~256	395	28	350	12	M20	22
	273	275						
300	304	~306	445	28	400	12	M20	22
	323,9	326						
350	355,6	358	505	30	460	16	M20	22
400	406,4	409	565	32	515	16	M22	25

Фланец PN 16 — Plane Welding Flange PN 16 DIN 2577/EN 1092-1/UNI 2278

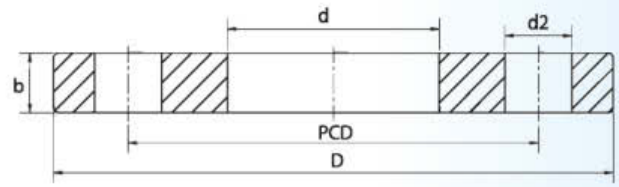

4F004

DN	d1 mm	d mm	D mm	b mm	PCD mm	NoHOLES	THREAD	d2 mm
15	20	21	95	12	65	4	M12	14
	21,3	22						
20	25	26	105	14	75	4	M12	14
	26,9	28						
25	30	31	115	14	85	4	M12	14
	33,7	34						
32	38	39	140	16	100	4	M16	18
	42,4	43						
40	44,5	45,5	150	16	110	4	M16	18
	48,3	49						
50	54	~54	165	18	125	4	M16	18
	57	58,1						
	60,3	62						
65	70	71	185	18	145	4	M16	18
	76,1	77						
80	84	~84	200	20	160	8	M16	18
	88,9	90						
100	104	~104	220	22	180	8	M16	18
	108	109,6						
	114,3	116						
125	129	~129	250	24	210	8	M16	18
	133	134,8						
	139,7	141						
150	154	~154	285	24	240	8	M20	22
	159	161,1						
	168,3	170						
200	204	~204	340	26	295	12	M20	22
	219,1	221						
250	254	~256	405	32	355	12	M22	25
	273	275						
300	304	~306	460	32	410	12	M22	25
	323,9	326						
350	355,6	358	520	36	470	16	M22	25
400	406,4	409	580	38	525	16	M27	30

Петрикань, 17
тел.: 0 22 317 318
моб.: 0 79 317 888
e-mail: office@inoxplus.md
web: www.inoxplus.md

FLANGES

Фланец PN 40 — Plane Welding Flange PN 40 UNI 6084

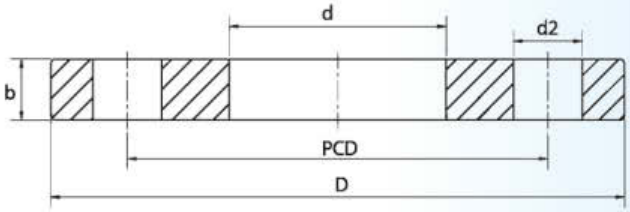

4F003

ΣΩΛΗΝΑΣ	d1	d	D	b	PCD	NoHOLES	THREAD	d2
DN	mm	mm	mm	mm	mm			mm
15	20	21	95	14	65	4	M12	14
	21,3	22						
20	25	26	105	16	75	4	M12	14
	26,9	28						
25	30	31	115	16	85	4	M12	14
	33,7	34						
32	38	39	140	18	100	4	M16	18
	42,4	43						
40	44,5	45,5	150	18	110	4	M16	18
	48,3	49						
50	54	~54	165	20	125	4	M16	18
	57	58,1						
	60,3	62						
65	70	71	185	24	145	8	M16	18
	76,1	77						
80	84	~84	200	26	160	8	M16	18
	88,9	90						
100	104	~104	235	26	190	8	M20	22
	108	109,6						
	114,3	116						
125	129	~129	270	28	220	8	M22	25
	133	134,8						
	139,7	141						
150	154	~154	300	30	250	8	M22	25
	159	161,1						
	168,3	170						
200	204	~204	375	36	320	12	M27	30
	219,1	221						
250	254	~256	450	44	385	12	M30	33
	273	275						
300	304	~306	515	48	450	16	M30	33
	323,9	326						
350	355,6	358	580	54	510	16	M33	36
400	406,4	409	660	60	585	16	M36x3	39

Фланец с шейкой PN 16 — Welding Neck Flange PN 16 DIN 2633/ UNI 2282

4F004

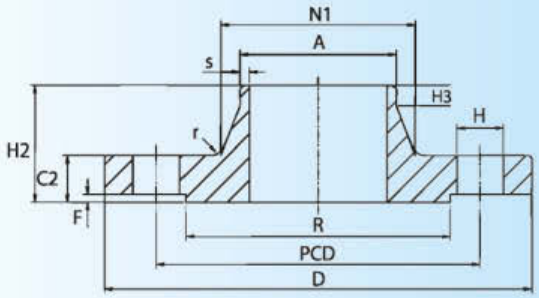

DN	A	D	PCD	N1	R	H2	C2	H3	F	r	s	H	N° HOLES	THREAD
mm	mm	mm	mm	mm	mm	mm	mm	mm	mm	mm	mm	mm	mm	mm
10	18	90	60	28	40	35	14	6	2	3	2,3	14	4	M12
15	22,5	95	65	32	45	35	14	6	2	3	2,5	14	4	M12
20	28	105	75	40	58	38	16	6	2	4	2,5	14	4	M12
25	34,5	115	85	45	68	38	16	6	2	4	2,8	14	4	M12
32	43,5	140	100	56	78	40	16	6	2	5	3	18	4	M16
40	49,5	150	110	64	88	42	16	7	3	5	3	18	4	M16
50	61,5	165	125	75	102	45	18	8	3	5	3,5	18	4	M16
65	77	185	145	90	122	45	18	10	3	6	3,5	18	4	M16
80	90	200	160	105	138	50	20	10	3	6	3,7	18	8	M16
100	115,5	220	180	131	158	52	20	12	3	6	3,7	18	8	M16
125	141	250	210	156	188	55	22	12	3	6	4	18	8	M16
150	170,5	285	240	184	212	55	22	12	3	8	5	22	8	M20
200	221	340	295	235	268	62	24	16	3	8	5	22	12	M20
250	275	405	355	292	320	70	26	16	3	10	5,5	25	12	M22
300	326	460	410	344	378	78	28	16	4	10	6	25	12	M22
350	357,5	520	470	390	438	82	30	16	4	12	6,4	25	16	M22
400	408,5	580	525	445	490	85	32	16	4	12	7	30	16	M27

Петрикань, 17
тел.: 0 22 317 318
моб.: 0 79 317 888
e-mail: office@inoxplus.md
web: www.inoxplus.md

FLANGES

Фланец с шейкой PN 40 — Welding Neck Flange PN 40 DIN 2635 / UNI 2284

4F005

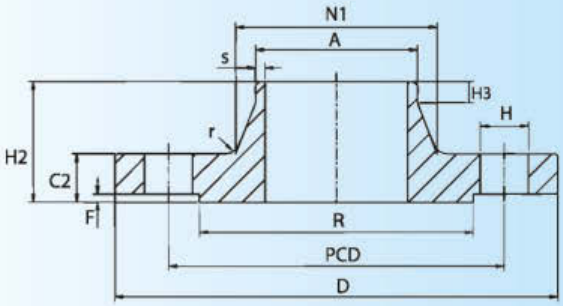

DN	A	D	PCD	N1	R	H2	C2	H3	F	r	s	H	№ HOLES	TEMPLATE THREAD
mm	mm	mm	mm	mm	mm	mm	mm	mm	mm	mm	mm	mm	mm	mm
10	18	90	60	28	40	35	16	6	2	3	2,3	14	4	M12
15	22,5	95	65	32	45	38	16	6	2	3	2,5	14	4	M12
20	28	105	75	40	58	40	18	6	2	4	2,5	14	4	M12
25	34,5	115	85	46	68	40	18	6	2	4	2,8	14	4	M12
32	43,5	140	100	56	78	42	18	6	2	5	3	18	4	M16
40	49,5	150	110	64	88	45	18	7	3	5	3	18	4	M16
50	61,5	165	125	75	102	48	20	8	3	5	3,5	18	4	M16
65	77	185	145	90	122	52	22	10	3	6	3,5	18	8	M16
80	90	200	160	105	138	58	24	12	3	6	3,7	18	8	M16
100	115,5	235	190	131	162	65	24	12	3	6	3,7	22	8	M20
125	141	270	220	156	188	68	26	12	3	6	4	25	8	M22
150	170,5	300	250	184	218	75	28	12	3	8	5	25	8	M22
200	221	375	320	235	285	88	34	16	3	8	5,5	30	12	M27
250	275	450	385	292	345	105	38	18	3	10	6,5	33	12	M30
300	326	515	450	344	410	115	42	18	4	10	7,3	33	12	M30
350	357,5	580	510	408	465	125	46	20	4	12	8	36	16	M33
400	408,5	660	585	462	535	135	50	20	4	12	9	39	16	M36X3

Глухой фланец PN 40 — Blind Flange PN 40 DIN 2527 / UNI 6095

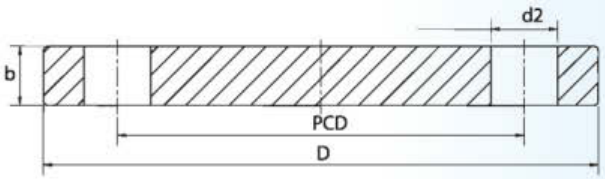

4F006

DN	D	PCD	b	d2	№ HOLES	Template
mm	mm	mm	mm	mm	mm	mm
10	90	60	16	14	4	M12
15	95	65	16	14	4	M12
20	105	75	18	14	4	M12
25	115	85	18	14	4	M12
32	140	100	18	18	4	M16
40	150	110	18	18	4	M16
50	165	125	20	18	4	M16
65	185	145	22	18	8	M16
80	200	160	24	18	8	M16
100	235	190	24	22	8	M20
125	270	220	26	25	8	M22
150	300	250	28	25	8	M22
200	375	320	34	30	12	M27
250	450	385	38	33	12	M30
300	515	450	42	33	16	M30
350	580	510	46	36	16	M33
400	660	585	50	39	16	M36X3

INOX PLUS
Петрикань, 17
тел.: 0 22 317 318
моб.: 0 79 317 888
e-mail: office@inoxplus.md
web: www.inoxplus.md

BUTT WELDING FITTINGS SCHEDULE

Отвод 90°длинный радиус — Elbow 90° Long Radius

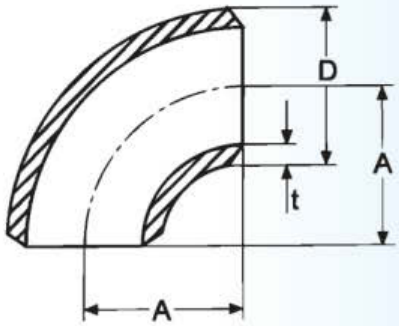

Dimensions in mm

Diameter	Schedule	D	t	A	kg/piece
1/2"	10s	21.3	2.11	38.1	0.060
	40s	21.3	2.77	38.1	0.080
	80s	21.3	3.73	38.1	0.100
3/4"	10s	26.7	2.11	38.1	0.070
	40s	26.7	2.87	38.1	0.090
	80s	26.7	3.91	38.1	0.110
1 "	10s	33.4	2.77	38.1	0.140
	40s	33.4	3.38	38.1	0.160
	80s	33.4	4.55	38.1	0.220
1 1/4 "	10s	42.2	2.77	47.6	0.230
	40s	42.2	3.56	47.6	0.250
	80s	42.2	4.85	47.6	0.400
1 1/2 "	10s	48.3	2.77	57.2	0.310
	40s	48.3	3.68	57.2	0.400
	80s	48.3	5.08	57.2	0.510
2 "	10s	60.3	2.77	76.2	0.510
	40s	60.3	3.91	76.2	0.710
	80s	60.3	5.54	76.2	0.910
2 1/2"	10s	73.0	3.05	95.3	0.850
	40s	73.0	5.16	95.3	1.360
	80s	73.0	7.01	95.3	1.810
3 "	10s	88.9	3.05	114.3	1.220
	40s	88.9	5.49	114.3	2.180
	80s	88.9	7.62	114.3	2.980
3 1/2 "	10s	101.6	3.05	133.4	1.700
	40s	101.6	5.74	133.4	1.830
4"	10s	114.3	3.05	152.4	2.150
	40s	114.3	6.02	152.4	4.170
	80s	114.3	8.56	152.4	6.180
5"	10s	141.3	3.40	190.5	3.630
	40s	141.3	6.55	190.5	6.860
	80s	141.3	9.53	190.5	9.580
6 "	10s	168.3	3.40	228.6	4.900
	40s	1683	7.11	228.6	10.890
	80s	168.3	10.97	228.6	16.330
8"	10s	219.1	3.76	304.8	10.660
	40s	219.1	8.18	304.8	21.550
	80s	219.1	12.70	304.8	33.110
10"	10s	273.1	4.19	381.0	19.500
	40s	273.1	9.27	381.0	38.560
12"	10s	323.9	4.57	457.2	27.220
	40s	323.9	9.53	457.2	59.420
14"	10s	355.6	4.78	533.4	36.300
16"	10s	406.4	4.78	609.6	47.630
18"	10s	457.2	4.78	685.8	59.870
20"	10s	508.0	5.54	762.0	99.790
24"	10s	609.6	6.35	9.14.4	140.610

INOX PLUS
Петрикань, 17
тел.: 0 22 317 318
моб.: 0 79 317 888
e-mail: office@inoxplus.md
web: www.inoxplus.md

BUTT WELDING FITTINGS SCHEDULE

Отвод 45°длинный радиус — Eldow 45° Long Radius

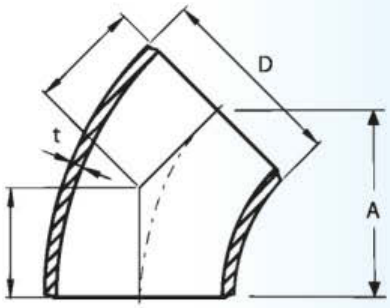

Dimensions in mm

Diameter	Schedule	D	t	A	kg/piece
1/2"	10s	21.3	2.11	38.1	0.060
	40s	21.3	2.77	38.1	0.080
	80s	21.3	3.73	38.1	0.100
3/4"	10s	26.7	2.11	38.1	0.070
	40s	26.7	2.87	38.1	0.090
	80s	26.7	3.91	38.1	0.110
1 "	10s	33.4	2.77	38.1	0.140
	40s	33.4	3.38	38.1	0.160
	80s	33.4	4.55	38.1	0.220
11/4 "	10s	42.2	2.77	47.6	0.230
	40s	42.2	3.56	47.6	0.250
	80s	42.2	4.85	47.6	0.400
11/2 "	10s	48.3	2.77	57.2	0.310
	40s	48.3	3.68	57.2	0.400
	80s	48.3	5.08	57.2	0.510
2 "	10s	60.3	2.77	76.2	0.510
	40s	60.3	3.91	76.2	0.710
	80s	60.3	5.54	76.2	0.910
21/2"	10s	73.0	3.05	95.3	0.850
	40s	73.0	5.16	95.3	1.360
	80s	73.0	7.01	95.3	1.810
3 "	10s	88.9	3.05	114.3	1.220
	40s	88.9	5.49	114.3	2.180
	80s	88.9	7.62	114.3	2.980
31/2 "	10s	101.6	3.05	133.4	1.700
	40s	101.6	5.74	133.4	1.830
4"	10s	114.3	3.05	152.4	2.150
	40s	114.3	6.02	152.4	4.170
	80s	114.3	8.56	152.4	6.180
5"	10s	141.3	3.40	190.5	3.630
	40s	141.3	6.55	190.5	6.860
	80s	141.3	9.53	190.5	9.580
6 "	10s	168.3	3.40	228.6	4.900
	40s	1683	7.11	228.6	10.890
	80s	168.3	10.97	228.6	16.330
8"	10s	219.1	3.76	304.8	10.660
	40s	219.1	8.18	304.8	21.550
	80s	219.1	12.70	304.8	33.110
10"	10s	273.1	4.19	381.0	19.500
	40s	273.1	9.27	381.0	38.560
12"	10s	323.9	4.57	457.2	27.220
	40s	323.9	9.53	457.2	59.420
14"	10s	355.6	4.78	533.4	36.300
16"	10s	406.4	4.78	609.6	47.630
18"	10s	457.2	4.78	685.8	59.870
20"	10s	508.0	5.54	762.0	99.790
24"	10s	609.6	6.35	9.14.4	140.610

Петрикань, 17
тел.: 0 22 317 318
моб.: 0 79 317 888
e-mail: office@inoxplus.md
web: www.inoxplus.md

BUTT WELDING FITTINGS SCHEDULE

Т-деталь — Equal Tee

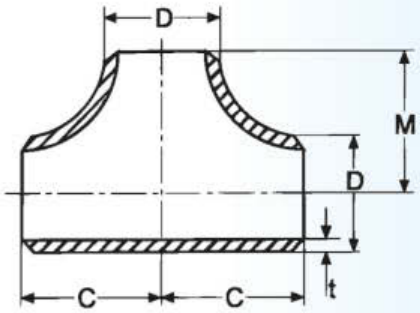

Dimensions in mm

Diameter	Schedule	D	t	C/M
1/2"	10s	21.3	2.11	25.4
	40s	21.3	2.77	25.4
	80s	21.3	3.73	25.4
3/4"	10s	26.7	2.11	28.6
	40s	26.7	2.87	28.6
	80s	26.7	3.91	28.6
1 "	10s	33.4	2.77	38.1
	40s	33.4	3.38	38.1
	80s	33.4	4.55	38.1
1 1/4 "	10s	42.2	2.77	47.6
	40s	42.2	3.56	47.6
	80s	42.2	4.85	47.6
1 1/2 "	10s	48.3	2.77	57.2
	40s	48.3	3.68	57.2
	80s	48.3	5.08	57.2
2 "	10s	60.3	2.77	63.5
	40s	60.3	3.91	63.5
	80s	60.3	5.54	63.5
2 1/2"	10s	73.0	3.05	76.2
	40s	73.0	5.16	76.2
	80s	73.0	7.01	76.2
3 "	10s	88.9	3.05	85.7
	40s	88.9	5.49	85.7
	80s	88.9	7.62	85.7
3 1/2 "	10s	101.6	3.05	95.3
	40s	101.6	5.74	95.3
4"	10s	114.3	3.05	104.8
	40s	114.3	6.02	104.8
	80s	114.3	8.56	104.8
5"	10s	141.3	3.40	123.8
	40s	141.3	6.55	123.8
	80s	141.3	9.53	123.8
6 "	10s	168.3	3.40	142.9
	40s	1683	7.11	142.9
	80s	168.3	10.97	142.9
8"	10s	219.1	3.76	177.8
	40s	219.1	8.18	177.8
10"	10s	273.1	4.19	215.9
	40s	273.1	9.27	215.9
12"	10s	323.9	4.57	254.0
	40s	323.9	9.53	254.0
14"	10s	355.6	4.78	279.4
16"	10s	406.4	4.78	304.8
18"	10s	457.2	4.78	342.9
20"	10s	508.0	5.54	381.0
24"	10s	609.6	6.35	431.8

Петрикань, 17
тел.: 0 22 317 318
моб.: 0 79 317 888
e-mail: office@inoxplus.md
web: www.inoxplus.md

BUTT WELDING FITTINGS SCHEDULE

Редукция концентрическая — Concentric reducer

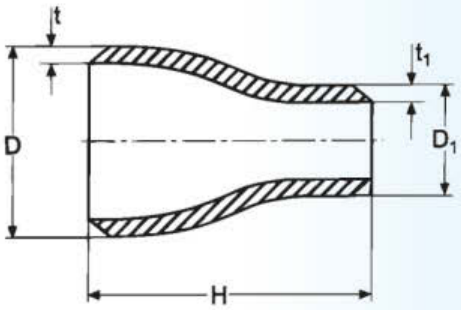

Dimensions in mm

Diameter	Schedule	D	D1	t	t1	H
3/4x1/2"	10s	26.7	21.3	2.11	2.11	39.3
1x1/2"	10s	33.4	21.3	2.77	2.11	50.8
1x3/4"	10s	33.4	26.7	2.77	2.11	50.8
11/4"x1/2"	10s	42.2	21.3	2.77	2.11	50.8
11/4x3/4	10s	42.2	26.7	2.77	2.11	50.8
11/4x1"	10s	42.2	33.4	2.77	2.77	50.8
11/2x1/2"	10s	48.3	21.3	2.77	2.11	63.5
11/2x3/4"	10s	48.3	26.7	2.77	2.11	63.5
11/2x1"	10s	48.3	33.4	2.77	2.77	63.5
11/2x11/4"	10s	48.3	42.2	2.77	2.77	63.5
2 x1/2"	10s	60.3	21.3	5.54	3.73	76.2
2 x3/4"	10s	60.3	26.7	2.77	2.11	76.2
2 x 1"	10s	60.3	33.4	2.77	2.77	76.2
2x11/4"	10s	60.3	42.2	2.77	2.77	76.2
2x11/2"	10s	60.3	48.3	2.77	2.77	76.2
21/2x1"	10s	60.3	33.4	3.05	2.77	88.9
21/2x11/2"	10s	73.0	48.3	3.05	2.77	88.9
21/2x2	10s	73.0	60.3	3.05	2.77	88.9
3x1"	10s	88.9	33.4	3.05	2.77	88.9
3x11/4"	10s	88.9	42.2	5.49	3.56	88.9
3x11/2"	10s	88.9	48.3	3.05	2.77	88.9
3x2"	10s	88.9	60.3	3.05	2.77	88.9
3x21/2"	10s	88.9	73.0	3.05	3.05	88.9
4x11/2"	10s	114.3	60.3	3.05	5.08	101.6
4 x 2"	10s	141.3	73.0	3.05	2.77	101.6
4x21/2"	10s	141.3	3.05	3.05	2.77	101.6
4 x 3"	10s	114.3	88.9	3.05	3.05	101.6
5x21/2"	10s	141.3	73.0	3.40	3.05	127.0
5 x 3"	10s	141.3	88.9	3.40	3.05	127.0
5 x 4"	10s	141.3	114.3	3.40	3.05	127.0
6 x 3"	10s	168.3	88.9	3.40	3.05	139.7
6 x 4"	10s	168.3	114.3	3.40	3.05	139.7
6 x 5"	10s	168.3	141.4	3.40	3.40	139.7

Петрикань, 17
тел.: 0 22 317 318
моб.: 0 79 317 888
e-mail: office@inoxplus.md
web: www.inoxplus.md

BUTT WELDING FITTINGS SCHEDULE

Редукция экстцентричная — Eccentric Reducer

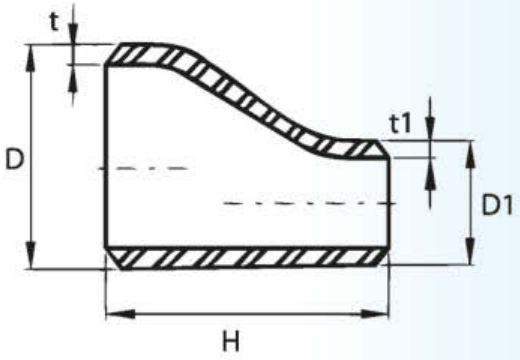

Dimensions in mm

Diameter	Schedule	D	D1	t	t1	H
3/4x1/2"	10s	26.7	21.3	2.11	2.11	39.3
1x1/2"	10s	33.4	21.3	2.77	2.11	50.8
1x3/4"	10s	33.4	26.7	2.77	2.11	50.8
11/4"x1/2"	10s	42.2	21.3	2.77	2.11	50.8
11/4x3/4	10s	42.2	26.7	2.77	2.11	50.8
11/4x1"	10s	42.2	33.4	2.77	2.77	50.8
11/2x1/2"	10s	48.3	21.3	2.77	2.11	63.5
11/2x3/4"	10s	48.3	26.7	2.77	2.11	63.5
11/2x1"	10s	48.3	33.4	2.77	2.77	63.5
11/2x11/4"	10s	48.3	42.2	2.77	2.77	63.5
2 x1/2"	10s	60.3	21.3	5.54	3.73	76.2
2 x3/4"	10s	60.3	26.7	2.77	2.11	76.2
2 x 1"	10s	60.3	33.4	2.77	2.77	76.2
2x11/4"	10s	60.3	42.2	2.77	2.77	76.2
2x11/2"	10s	60.3	48.3	2.77	2.77	76.2
21/2x1"	10s	60.3	33.4	3.05	2.77	88.9
21/2x11/2"	10s	73.0	48.3	3.05	2.77	88.9
21/2x2	10s	73.0	60.3	3.05	2.77	88.9
3x1"	10s	88.9	33.4	3.05	2.77	88.9
3x11/4"	10s	88.9	42.2	5.49	3.56	88.9
3x11/2"	10s	88.9	48.3	3.05	2.77	88.9
3x2"	10s	88.9	60.3	3.05	2.77	88.9
3x21/2"	10s	88.9	73.0	3.05	3.05	88.9
4x11/2"	10s	114.3	60.3	3.05	5.08	101.6
4 x 2"	10s	141.3	73.0	3.05	2.77	101.6
4x21/2"	10s	141.3	3.05	3.05	2.77	101.6
4 x 3"	10s	114.3	88.9	3.05	3.05	101.6
5x21/2"	10s	141.3	73.0	3.40	3.05	127.0
5 x 3"	10s	141.3	88.9	3.40	3.05	127.0
5 x 4"	10s	141.3	114.3	3.40	3.05	127.0
6 x 3"	10s	168.3	88.9	3.40	3.05	139.7
6 x 4"	10s	168.3	114.3	3.40	3.05	139.7
6 x 5"	10s	168.3	141.4	3.40	3.40	139.7

INOX PLUS
Петрикань, 17
тел.: 0 22 317 318
моб.: 0 79 317 888
e-mail: office@inoxplus.md
web: www.inoxplus.md

BUTT WELDING FITTINGS SCHEDULE

Заглушка — Cap Welding

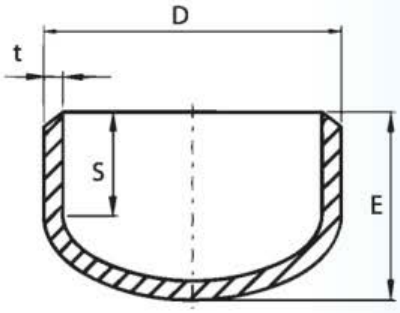

≃ ϕ 300 x 3.0 mm ≃ h = 100 mm

≃ ϕ 300 x 2.0 mm ≃ h = 20 mm

Dimensions in mm

Diameter	Schedule	D	t	E
1/2"	10s	21.3	2.11	25,4
	40s	21.3	2.77	25,4
	80s	21.3	3.73	25,4
3/4"	10s	26.7	2.11	25,4
	40s	26.7	2.87	25,4
	80s	26.7	3.91	25,4
1 "	10s	33.4	2.77	38,1
	40s	33.4	3.38	38,1
	80s	33.4	4.55	38,1
11/4 "	10s	42.2	2.77	38,1
	40s	42.2	3.56	38,1
	80s	42.2	4.85	38,1
11/2 "	10s	48.3	2.77	38,1
	40s	48.3	3.68	38,1
	80s	48.3	5.08	38,1
2 "	10s	60.3	2.77	38,1
	40s	60.3	3.91	38,1
	80s	60.3	5.54	38,1
21/2"	10s	73.0	3.05	38,1
	40s	73.0	5.16	38,1
	80s	73.0	7.01	38,1
3 "	10s	88.9	3.05	50,8
	40s	88.9	5.49	50,8
	80s	88.9	7.62	50,8
31/2 "	10s	101.6	3.05	63,5
	40s	101.6	5.74	63,5
4"	10s	114.3	3.05	63,5
	40s	114.3	6.02	63,5
	80s	114.3	8.56	63,5
5"	10s	141.3	3.40	76,2
	40s	141.3	6.55	76,2
	80s	141.3	9.53	76,2
6 "	10s	168.3	3.40	88,9
	40s	1683	7.11	88,9
	80s	168.3	10.97	88,9
8"	10s	219.1	3.76	101,6
	40s	219.1	8.18	101,6
10"	10s	273.1	4.19	127
	40s	273.1	9.27	127
12"	10s	323.9	4.57	152,4
	40s	323.9	9.53	152,4
14"	10s	355.6	4.78	165,1
16"	10s	406.4	4.78	177,8
18"	10s	457.2	4.78	203,2
20"	10s	508.0	5.54	228,6
24"	10s	609.6	6.35	266,7

INOX PLUS
Петрикань, 17
тел.: 0 22 317 318
моб.: 0 79 317 888
e-mail: office@inoxplus.md
web: www.inoxplus.md

Регулирующая арматура ISO — Valves, BSP Fittings & Quick Couplings

INOX PLUS
Петрикань, 17
тел.: 0 22 317 318
моб.: 0 79 317 888
e-mail: office@inoxplus.md
web: www.inoxplus.md

BALL VALVES

Двухкамерный шаровый кран Gas-Gas — Ball Valve 2PC Full Bore Light Type Threaded

5F001

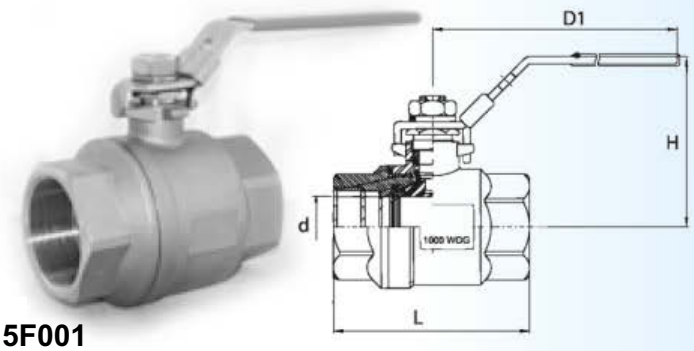

SIZE		d		L		D1		H		ΦPad		h	Cv
inch	mm	inch	mm	inch	mm	inch	mm	inch	mm	inch	mm		Factor
1/4	8	0.43	11.0	2,28	57,8	4,06	103	2,25	57,2	-	-	-	16
3/8	10	0.49	12.5	2,28	57,8	4,06	103	2,25	57,2	-	-	-	16
1/2	15	0.59	15.0	2,43	61,7	4,06	103	2,33	59,1	-	-	-	26
3/4	20	0.79	20.0	2,76	70,1	4,06	103	2,46	62,6	-	-	-	55
1	25	0.98	25.0	3,20	81,3	5,00	127	2,78	70,7	-	-	-	110
1 1/4	32	1.26	32.0	3,78	96	5,00	127	3,00	76,2	-	-	-	180
1 1/2	40	1.50	38.0	4,43	112,5	6,02	153	3,51	89,1	-	-	-	270
2	50	2.00	50.8	4,96	126	7,60	193	3,87	98,2	-	-	-	500
2 1/2	65	2.56	65.0	6,63	168,5	7,60	193	4,35	110,6	2,76	70	M8xP1.25	800
3	80	3.15	80.0	7,54	191,4	10,98	279	4,88	124,0	4,02	102	M10xP1.5	1150
4	100	3.94	100.0	8,52	216,5	13,19	335	6,63	168,5	4,02	102	M10xP1.5	2120

Двухкамерный шаровый кран — Ball Valve 2PC Full Bore Threaded

5F002

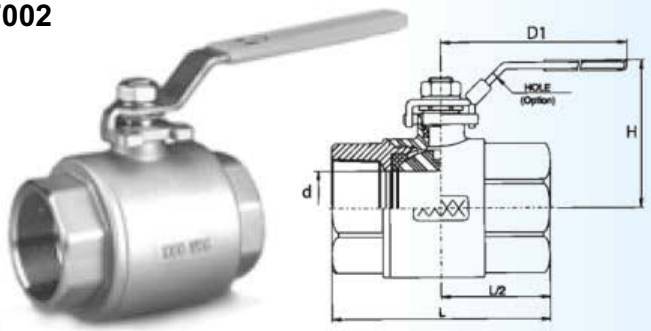

SIZE		d		L		D1		H		ΦPad		h	Cv
inch	mm	inch	mm	inch	mm	inch	mm	inch	mm	inch	mm		Factor
1/4	8	0.43	11.0	2.34	59.5	3.94	100	2.11	53.5	1.42	36	M5xP0.8	6
3/8	10	0.40	12.5	2.34	59.5	3.94	100	2.22	56.4	1.42	36	M5xP0.8	12
1/2	15	0.59	15.0	2.52	64.0	4.02	102	2.17	55.0	1.42	36	M5xP0.8	19
3/4	20	0.79	20.0	3.03	77.0	4.96	126	2.60	66.0	1.42	36	M5xP0.8	37
1	25	0.98	25.0	3.57	90.8	4.96	126	2.80	71.0	1.42	36	M5xP0.8	64
1 1/4	32	1.26	32.0	3.87	98.3	5.98	152	3.50	89.0	1.97	50	M6xP1.0	103
1 1/2	40	1.50	38.0	4.63	117.5	5.98	152	3.62	92.0	1.97	50	M6xP1.0	143
2	50	2.00	50.8	5.35	136.0	7.48	190	4.21	107.0	1.97	50	M6xP1.0	360
2 1/2	65	2.56	65.0	6.50	165.0	7.48	190	4.69	119.0	2.76	70	M8xP1.25	440
3	80	3.15	80.0	7.62	193.5	11.81	300	5.16	131.0	4.02	102	M10xP1.5	520
4	100	3.94	100.0	8.50	216.0	14.96	380	6.73	171.0	4.02	102	M10xP1.5	650

Двухкамерный шаровый кран — Ball Valve 2PC Full Bore Threaded ISO Pad

5F003

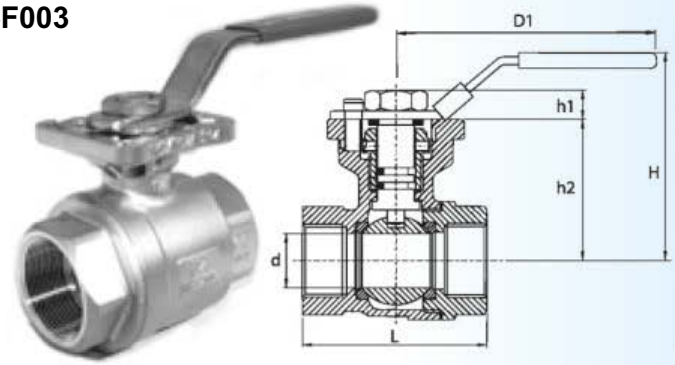

SIZE		d	L	H	S	h1	h2	d2	d3	Torque
inch	mm	mm	mm	mm	mm	mm	mm	mm	mm	Nm
1/4	8	11,6	58	62	9	8	36,4	36	42	5,5
3/8	10	12,7	58	62	9	8	36,4	36	42	5,5
1/2	15	15	58	62	9	8	36,4	36	42	5,5
3/4	20	20	65,6	65	9	9	39,2	36	42	7,5
1	25	25	78,7	76	11	11	48,7	42	50	11
1 1/4	32	32	90	81,5	11	11	54,2	42	50	15
1 1/2	40	38	105	103	14	11,5	65,7	50	70	20
2	50	50	124	111,5	14	11,5	75,5	50	70	40
2 1/2	65	63	146,2	141	17	20,5	91,5	70	102	60
3	80	76	163,7	150	17	20,5	100,75	70	102	85
4	100	99	175,2	160	17	20,5	109,40	100	125	116

Трёхкамерный шаровый кран Gas-Gas — Ball Valve 3PC Full Bore Threaded

5F004

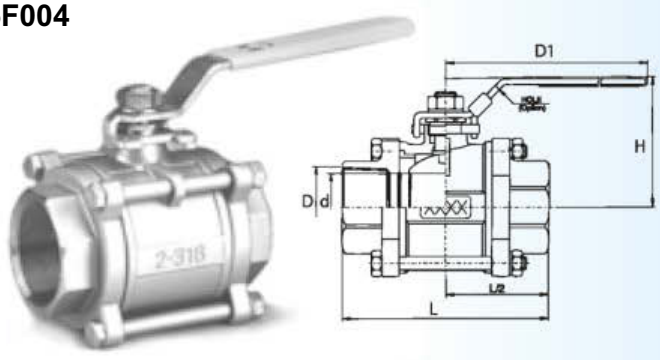

SIZE		d		L		D1		H		W2		h	Cv
inch	mm	inch	mm	inch	mm	inch	mm	inch	mm	inch	mm		Factor
1/4	8	0.43	11.0	2.56	65	4.02	102	4.02	53.5	1.42	36	M5xP0.8	6
3/8	10	0.40	12.5	2.56	65	4.02	102	4.02	56.4	1.42	36	M5xP0.8	12
1/2	15	0.59	15.0	2.80	71	4.02	102	4.02	55.0	1.42	36	M5xP0.8	19
3/4	20	0.79	20.0	3.35	85	4.96	126	4.96	66.0	1.42	36	M5xP0.8	37
1	25	0.98	25.0	3.74	95	4.96	126	4.96	71.0	1.42	36	M5xP0.8	64
1 1/4	32	1.26	32.0	4.37	111	5.91	150	5.91	89.0	1.97	50	M6xP1.0	103
1 1/2	40	1.50	38.0	4.76	121	5.91	150	5.91	92.0	1.97	50	M6xP1.0	143
2	50	2.00	50.8	5.51	140	7.32	186	7.32	107.0	1.97	50	M6xP1.0	360
2 1/2	65	2.56	65.0	6.81	173	10.71	272	10.71	119.0	2.76	70	M8xP1.25	440
3	80	3.15	80.0	7.56	192	10.71	272	10.71	131.0	4.02	102	M10xP1.5	520
4	100	3.94	100.0	8.86	225	13.19	335	13.19	171.0	4.02	102	M10xP1.5	820

Петрикань, 17
тел.: 0 22 317 318
моб.: 0 79 317 888
e-mail: office@inoxplus.md
web: www.inoxplus.md

BALL VALVES

Трёхкамерный шаровый кран G-G — Ball Valve 3PC Full Bore Light Type Threaded

5F005

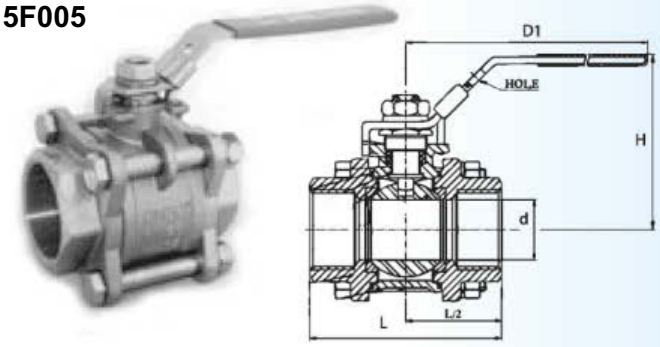

SIZE		d		L		D1		H		W2		h	Cv
inch	mm	inch	mm	inch	mm	inch	mm	inch	mm	inch	mm		Factor
1/2	15	0,59	15	2,21	56,2	4,06	103	2,31	58,7	1.42	36	M5xP0.8	26
3/4	20	0,79	20	2,73	69,4	5,00	127	2,56	64,9	1.42	36	M5xP0.8	55
1	25	1,00	25,4	3,13	79,6	5,00	127	2,82	71,7	1.42	36	M5xP0.8	110
1¼	32	1,26	32	3,50	88,8	6,02	153	2,90	73,7	1.97	50	M6xP1.0	180
1½	40	1,57	40	4,00	101,6	6,02	153	3,47	88,2	1.97	50	M6xP1.0	270
2	50	2,00	50,8	4,66	118,4	7,60	193	3,82	97,1	1.97	50	M6xP1.0	500

Трёхкамерный шаровый кран G-G — Ball Valve 3PC Full Bore Threaded ISO Pad

5F006

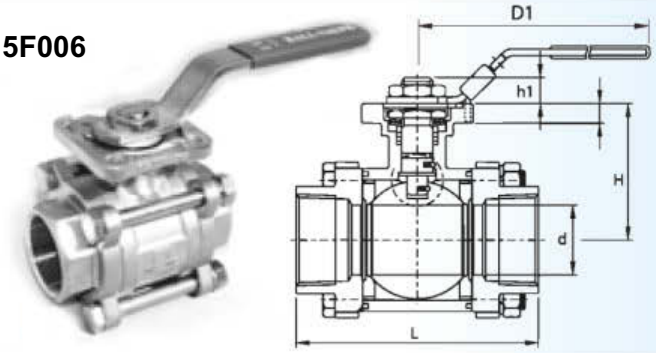

SIZE		d	L	D1	ISO 5211	A	B	h1	h2	d3	R1	R2	Torque
inch	mm	mm	mm	mm	mm	mm	mm	mm	mm	mm	mm	mm	Nm
1	25	25,4	95	127	F04/F05	45	10	12	60	50	4,5	5,5	11
1¼	32	32	111	127	F04/F05	55	10	12	63	50	4,5	5,5	15
1½	40	40	121	149	F05/F07	60	10	16	79	70	4,5	5,5	20
2	50	50,8	140	149	F05/F07	75	10	16	87	70	4,5	5,5	40
2½	65	65	185	325	F07/F10	100	10	17	105	70	4,5	5,5	89
3	80	76	205	325	F07/F10	100	10	17	111	70	4,5	5,5	97
4	100	100	240	325	F10/F12	125	12	22	136	102	5,5	6,5	116

Трёхкамерный шаровый кран S-S — Ball Valve 3PC Full Bore Welding ends

5F007

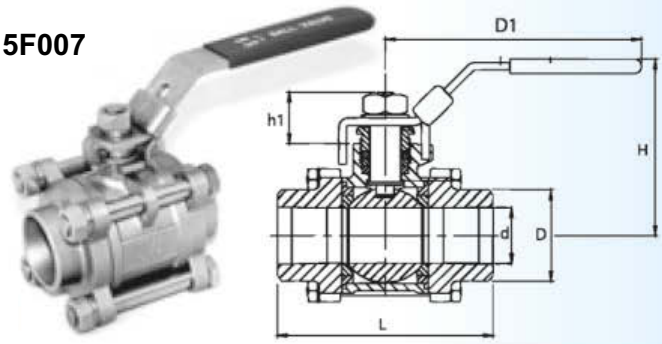

SIZE	d	L	H	D1	T	N	h1	K	D
inch	mm	mm	mm	mm	mm	mm	mm	inch	mm
1	25	25	95	76	158	35	8	15,5	7/16	34
1¼	32	32	111,2	81	158	45	8	15,5	7/16	42,5
1½	40	38	130,6	98	188	55	9	17,5	1/2	48,5
2	50	50	151	106	188	66	9	17,5	1/2	61
2½	65	65	185	138	245	86	12	33	3/4	77
3	80	80	212	154	290	100	12	33	3/4	90
4	100	100	235	178	320	125	16	42	1	115

Шаровый кран — Ball Valve 1PC Full Bore Flanged End Wafer Type

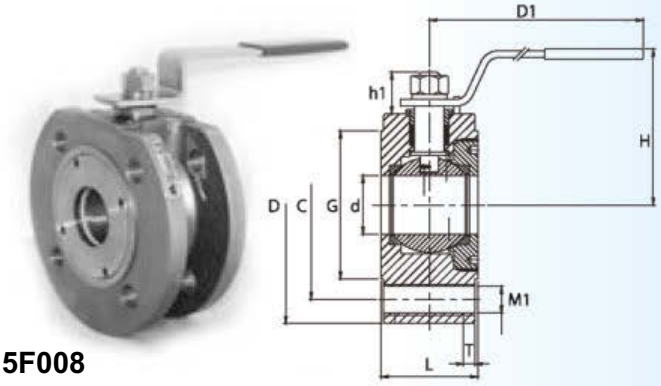

5F008

SIZE	d	L	D1	H	D	C	G	T	M1	h1
inch	mm	mm	mm	mm	mm	mm	mm	mm		mm
1/2	15	15	36	150	70	88	65	45	6	M12	21,7
3/4	20	20	38	150	70	98	75	58	6	M12	22
1	25	25	43	150	80	108	85	68	7	M12	25
1¼	32	32	51	156	87	128	100	78	7	M16	28
1½	40	38	63	180	102	150	110	88	13	M16	29
2	50	50	70	180	108	165	125	102	14	M16	29
2½	65	65	107	282	143	186	145	123	13,5	M16	41
3	80	76	120	290	152	200	160	138	15	M16	40
4	100	96	152	325	168	220	180	158	17	M16	40

INOX PLUS
Петрикань, 17
тел.: 0 22 317 318
моб.: 0 79 317 888
e-mail: office@inoxplus.md
web: www.inoxplus.md

BALL VALVES

Двухкамерный шаровый кран PN-PN — Ball Valve 2PC Full Bore Flanged End

5F009

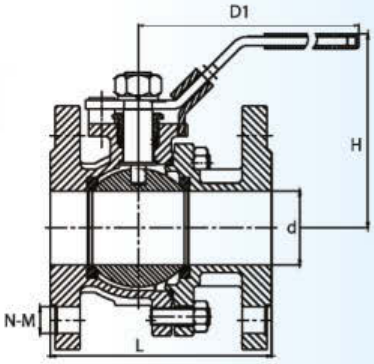

SIZE		d		L		D1		H		PCD		Torque(Nm)	
inch	mm	inch	mm	inch	mm	inch	mm	inch	mm	inch	mm	breakaway	action
1/2	15	0,59	15	4,53	115	5,91	150	2,99	76	1,65	42	12	8
3/4	20	0,79	20	4,72	120	5,91	150	3,07	78	1,65	42	14	10
1	25	0,98	25	4,92	125	7,09	180	3,54	90	1,65	42	18	13
1 1/4	32	1,26	32	5,12	130	7,09	180	3,70	94	1,97	50	21	15
1 1/2	40	1,57	40	5,51	140	9,61	244	4,88	124	2,76	70	25	18
2	50	1,97	50	5,91	150	9,61	244	5,20	132	2,76	70	30	20
2 1/2	65	2,56	65	6,69	170	11,22	285	6,69	170	2,76	70	35	25
3	80	3,15	80	7,09	180	11,22	285	7,09	180	4,02	102	60	40
4	100	3,86	98	7,48	190	1,22	285	7,64	194	4,02	102	70	50

Шаровый кран трехходовой G-G-G — Ball Valve Three Ways Threaded

5F010

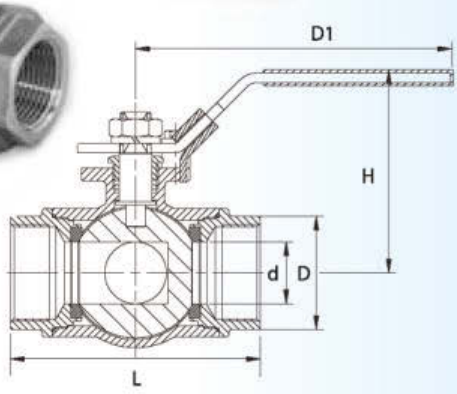

SIZE		d		L		D1		H		D	
inch	mm	inch	mm	inch	mm	inch	mm	inch	mm	inch	mm
1/2	15	0,49	12,5	2,99	76,0	5,91	150,0	2,64	67	1,00	25,5
3/4	20	0,63	16,0	3,39	86,0	5,91	150,0	3,03	77	1,26	32,0
1	25	0,79	20,0	3,90	99,1	7,09	180,0	3,27	83	1,52	38,5
1 1/4	32	0,98	25,0	4,62	117,4	7,09	180,0	3,46	88	1,91	48,5
1 1/2	40	1,26	32,0	4,87	123,8	9,59	243,5	4,57	116	2,30	58,5
2	50	1,50	38,0	5,83	148	9,59	243,5	4,88	124	2,74	69,5

STRAINERS

Фильтр Y с фланцевым окончанием — Flanged End Y-Strainer

5F011

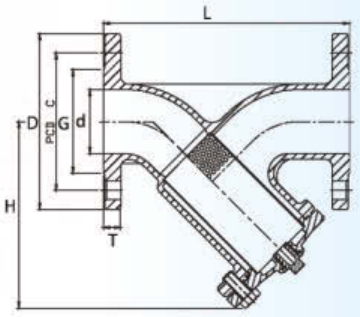

SIZE d		L	D	H	C	G	T
inch	mm	mm	mm	mm	mm	mm	mm
1/2	15	130	95	75	65	45	14
3/4	20	150	105	78	75	58	16
1	25	160	115	102	85	68	16
1 1/4	32	180	140	110	100	78	16
1 1/2	40	200	150	120	110	88	16
2	50	230	165	140	125	102	18
2 1/2	65	290	185	175	145	122	18
3	80	310	200	196	160	138	20
4	100	350	220	244	180	158	20

Петрикань, 17
тел.: 0 22 317 318
моб.: 0 79 317 888
e-mail: office@inoxplus.md
web: www.inoxplus.md

STRAINERS-CHECK VALVES

Фильтр Y-G-G — Screwed End Y-Strainer

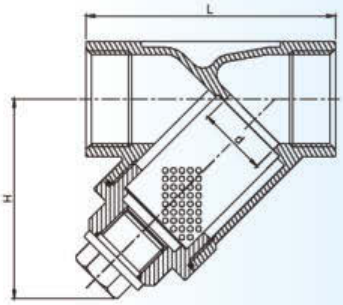

SIZE d		L	H
inch	mm	mm	mm
1/2	15	65	46,5
3/4	20	80	68,5
1	25	90	71
11/4	32	105	74
11/2	40	120	82,5
2	50	140	95
2 1/2	65	180	121
3	80	200	138,3

5F012

Клапан с внутренней резьбой — Spring Check Valve Internal Thread

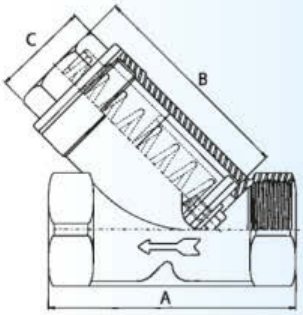

SIZE		A		B		C	
inch	mm	inch	mm	inch	mm	inch	mm
1/4	8	2.56	65	1.81	46	0.54	19
3/8	10	2.56	65	1.81	46	0.73	19
1/2	15	2.56	65	1.81	46	0.22	19
3/4	20	3.15	80	2.28	58	0.32	23
1	25	3.54	90	2.72	69	1.06	27
11/4	32	4.13	105	2.95	75	1.26	32
11/2	40	4.72	120	3.35	85	1.61	41
2	50	5.51	140	3.86	98	1.97	50

5F013

Обратный клапан с внутренней резьбой — Swing Check Valve Internal Thread

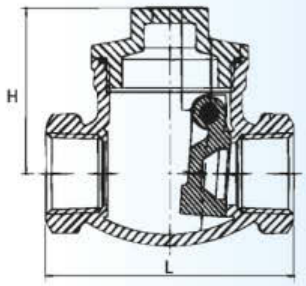

DN	Size	L	H
inch	mm	mm	mm
1/2	15	65	44
3/4	20	80	52
1	25	89	62
1 1/4	32	105	67
1 1/2	40	120	79
2	50	139	80
2 1/2	65	181	96
3	80	200	104

5F014

Диск обратного клапана — Disc Check Valve

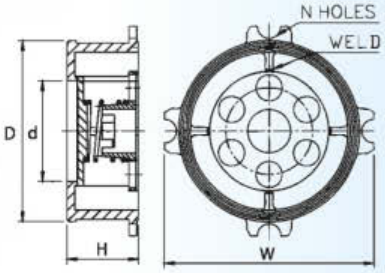

DN	d	D	H	W	N
inch	mm	mm	mm	mm	
1/2	15	36	16	54	4
3/4	20	43	18,5	64	4
1	25	51	22	74	4
1 1/4	32	63,5	27	85,5	4
1 1/2	40	73	32	96	4
2	50	93,5	40	111,5	4
2 1/2	65	117	46	135,5	4
3	80	141	50	150	6
4	100	163	61	177	8

5F015

INOX PLUS
Петрикань, 17
тел.: 0 22 317 318
моб.: 0 79 317 888
e-mail: office@inoxplus.md
web: www.inoxplus.md

BSP FITTINGS

Т-деталь — Tee Banded Equal

6F001

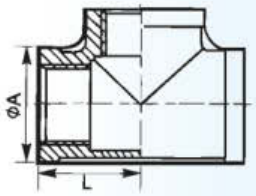

SIZE	ØA	L
1/4"	21.3	21.0
3/8"	23.5	23.6
1/2"	29.0	27.0
3/4"	35.0	33.0
1"	43.0	38.0
1-1/4"	52.0	45.0
1-1/2"	58.0	50.0
2"	71.0	58.0
2-1/2"	86.6	68.7
3"	99.2	77.8
4"	125.0	97.0

Отвод 90°F-F — 90° Eldow Banded Equal

6F002

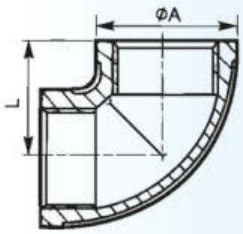

SIZE	ØA	L
1/4"	21.3	20.0
3/8"	23.5	21.3
1/2"	31.0	28.5
3/4"	37.0	33.5
1"	43.8	38.0
1-1/4"	54.5	45.0
1-1/2"	62.0	49.0
2"	75.0	56.5
2-1/2"	86.5	69.3
3"	99.0	77.5
4"	125.0	97.3

Отвод 90°M-F — Street Eldow 90°Banded

6F003

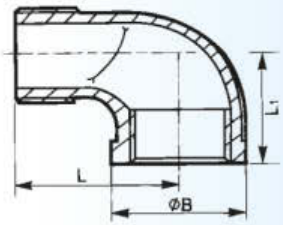

SIZE	ØB	L	L1
1/4"	18.0	28.3	19.0
3/8"	23.0	35.0	22.5
1/2"	29.0	42.0	29.5
3/4"	35.0	50.5	33.0
1"	43.0	52.0	38.0
1-1/4"	52.0	60.0	45.0
1-1/2"	58.0	65.0	50.0
2"	71.0	74.0	58.0
2-1/2"	84.0	99.5	68.0
3"	96.0	115.5	78.0
4"	121.0	146.5	97.0

Коническое соединение F-F — Unions F/F

6F004

K-6

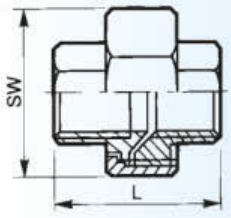

SIZE	L	SW
1/4"	37.5	30.0
3/8"	38.0	35.0
1/2"	42.0	42.0
3/4"	50.4	47.0
1"	48.0	53.0
1-1/4"	59.0	71.0
1-1/2"	64.0	78.0
2"	69.0	92.0
2-1/2"	80.0	112.0
3"	88.0	126.0
4"	108.0	157.0

K-6A

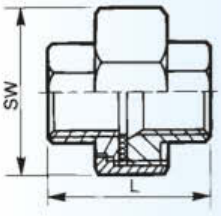

SIZE	L	SW
1/4"	38.0	30.0
3/8"	38.0	35.0
1/2"	41.0	42.0
3/4"	50.4	47.0
1"	48.0	53.0
1-1/4"	59.0	71.0
1-1/2"	64.0	78.0
2"	69.0	92.0
2-1/2"	80.0	112.0
3"	88.0	126.0
4"	108.0	157.0

Петрикань, 17
тел.: 0 22 317 318
моб.: 0 79 317 888
e-mail: office@inoxplus.md
web: www.inoxplus.md

BSP FITTINGS

Коническое соединение S-S — Unions B/W

6F005

K-6D

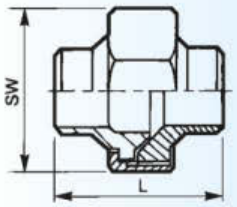

SIZE	L	SW
1/4"	35.5	30.0
3/8"	38.0	35.0
1/2"	42.0	42.0
3/4"	50.4	47.0
1"	48.0	53.0
1-1/4"	59.0	71.0
1-1/2"	64.0	78.0
2"	68.0	92.0
2-1/2"	80.0	112.0
3"	88.0	126.0
4"	108.0	157.0

K-6E

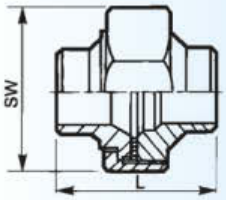

SIZE	L	SW
1/4"	35.5	30.0
3/8"	38.0	35.0
1/2"	41.0	42.0
3/4"	50.4	47.0
1"	48.0	53.0
1-1/4"	59.0	71.0
1-1/2"	64.0	78.0
2"	68.0	92.0
2-1/2"	80.0	112.0
3"	88.0	126.0
4"	108.0	157.0

Ниппель сварной — Welding Nipple

6F006

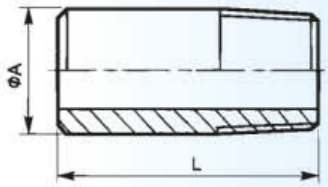

SIZE	ØA	L
1/4"	13.5	30.0
3/8"	17.2	30.0
1/2"	21.3	35.0
3/4"	26.9	40.0
1"	33.7	40.0
1-1/4"	42.4	50.0
1-1/2"	48.3	50.0
2"	60.3	50.0
2-1/2"	76.1	60.0
3"	88.9	70.0
4"	114.3	80.0

Ниппель шестигранный — Hex Nipple

6F007

DIN/BSP

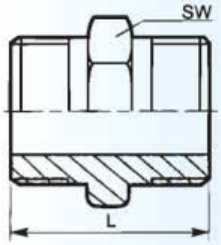

NPT/PT

SIZE	L	SW
1/4"	27.8	16.0
3/8"	28.0	19.0
1/2"	34.0	21.6
3/4"	40.0	30.0
1"	46.0	36.0
1-1/4"	52.5	46.0
1-1/2"	54.0	50.0
2"	62.0	65.5
2-1/2"	70.0	79.5
3"	78.4	90.0
4"	94.0	120.0

SIZE	L	SW
1/4"	32.5	17.0
3/8"	36.0	20.0
1/2"	42.5	26.0
3/4"	46.0	32.0
1"	51.5	38.0
1-1/4"	56.0	46.0
1-1/2"	59.0	52.5
2"	65.0	62.0
2-1/2"	80.0	77.0
3"	90.0	92.0
4"	107.0	118.0

INOX PLUS
Петрикань, 17
тел.: 0 22 317 318
моб.: 0 79 317 888
e-mail: office@inoxplus.md
web: www.inoxplus.md

BSP FITTINGS

Цилиндрический ниппель — Barrel Nipple

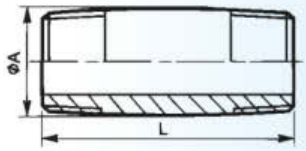

6F008

SIZE	ØA	L
1/4"	13.5	40.0
3/8"	17.2	40.0
1/2"	21.3	60.0
3/4"	26.9	60.0
1"	33.7	60.0
1-1/4"	42.4	80.0
1-1/2"	48.3	80.0
2"	60.3	100.0
2-1/2"	76.1	120.0
3"	88.9	120.0
4"	114.3	150.0

Заглушка — Hex Cap

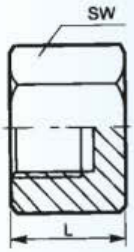

6F009

SIZE	L	SW
1/4"	17.0	18.0
3/8"	19.0	21.0
1/2"	20.0	27.0
3/4"	24.0	30.0
1"	25.0	38.0
1-1/4"	28.0	50.0
1-1/2"	28.0	55.0
2"	34.0	70.0
2-1/2"	40.0	92.0
3"	45.0	109.0
4"	50.0	132.0

Заглушка — Hex Head Plug

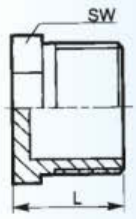

6F010

SIZE	L	SW
1/4"	17.5	16.0
3/8"	18.0	20.0
1/2"	25.0	24.0
3/4"	26.0	30.0
1"	29.0	38.0
1-1/4"	35.0	46.0
1-1/2"	38.0	52.0
2"	39.0	65.0
2-1/2"	44.0	81.0
3"	54.0	94.0
4"	55.0	119.0

Ниппель редукционный — Reducing Hex Nipple

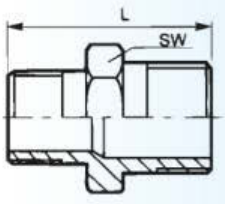

6F011

SIZE	L	SW
3/8"x1/4"	34.0	21.0
1/2"x3/8"	41.0	26.0
3/4"x1/2"	45.0	30.0
1"x1/2"	43.2	35.0
1"x3/4"	50.0	37.0
1-1/4"x1"	54.0	46.0
1-1/4"x3/4"	52.0	46.0
1-1/2"x1"	53.0	50.0
1-1/2"x1-1/4"	59.0	50.0
2"x1"	57.0	63.0
2"x1-1/4"	58.0	63.0
2"x1-1/2"	64.0	64.0
2-1/2"x1-1/2"	66.0	80.0
2-1/2"x2"	77.0	76.3
3"x2"	74.0	95.0
4"x3"	94.0	117.4

INOX PLUS
Петрикань, 17
тел.: 0 22 317 318
моб.: 0 79 317 888
e-mail: office@inoxplus.md
web: www.inoxplus.md

BSP FITTINGS

Редукция — Hex Bushing

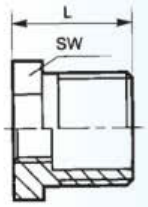

6F012

SIZE	L	SW
3/8"x1/4"	16.5	18.0
1/2"x3/8"	21.0	26.0
3/4"x1/2"	24.0	30.0
1"x1/2"	27.0	35.0
1"x3/4"	27.0	35.0
1-1/4"x1"	30.0	45.0
1-1/4"x3/4"	30.0	45.0
1-1/2"x1"	36.0	52.0
1-1/2"x1-1/4"	36.0	52.0
2"x1"	36.0	63.0
2"x1-1/4"	36.0	63.0
2"x1-1/2"	36.0	63.0
2-1/2"x1-1/2"	45.0	81.0
2-1/2"x2"	45.0	81.3
3"x2"	47.0	95.0
4"x3"	52.0	119.0

Редукция — Reducing Coupling

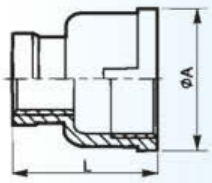

6F013

SIZE	L	SW
3/8"x1/4"	26.0	29.0
1/2"x3/8"	29.0	34.0
3/4"x1/2"	36.7	37.0
1"x1/2"	44.7	42.8
1"x3/4"	43.0	42.0
1-1/4"x1"	52.5	52.0
1-1/4"x3/4"	54.5	48.0
1-1/2"x1"	59.0	53.0
1-1/2"x1-1/4"	59.4	53.0
2"x1"	72.8	56.0
2"x1-1/4"	72.0	56.0
2"x1-1/2"	72.0	57.0
2-1/2"x1-1/2"	86.7	60.0
2-1/2"x2"	86.8	60.8
3"x2"	98.0	62.0
4"x3"	128.0	65.0

Штекер с квадратной головкой — Square Head Plug

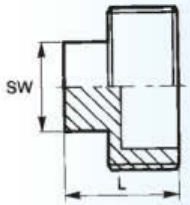

6F014

SIZE	L	SW
1/4"	20.0	09.0
3/8"	22.0	11.0
1/2"	25.0	13.0
3/4"	27.0	16.0
1"	32.0	20.0
1-1/4"	35.0	24.0
1-1/2"	37.0	25.0
2"	38.0	32.0
2-1/2"	48.0	42.0
3"	52.0	46.0
4"	62.0	58.0

Шланговая надставка — Hose Nipple

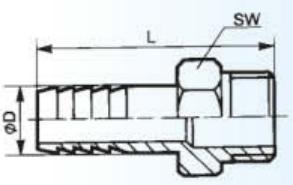

6F015

SIZE	L	SW	Ø D	
1/4"	47.0	16.5	9.0	6.3
3/8"	55.0	20.0	11.0	9.5
1/2"	64.0	23.5	14.0	12.7
3/4"	68.0	31.0	20.5	19.0
1"	71.0	38.5	27.0	25.4
1-1/4"	80.0	46.0	33.0	31.8
1-1/2"	95.0	52.0	39.5	38.1
2"	105.0	62.0	52.0	50.8
2-1/2"	107.0	80.0	67.0	63.5
3"	112.0	91.0	80.0	76.2
4"	130.0	116.5	105.0	101.6

Петрикань, 17
тел.: 0 22 317 318
моб.: 0 79 317 888
e-mail: office@inoxplus.md
web: www.inoxplus.md

BSP FITTINGS

Блокировочная гайка — Hex Nut

6F016

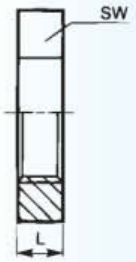

SIZE	L	SW
1/4"	7.0	23.0
3/8"	8.0	26.0
1/2"	10.0	31.0
3/4"	11.0	37.0
1"	10.0	46.0
1-1/4"	11.0	55.0
1-1/2"	12.0	63.0
2"	13.0	76.0
2-1/2"	16.0	95.0
3"	19.0	105.0
4"	20.0	131.0

Заглушка — Round Cap

6F017

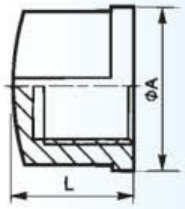

SIZE	ØA	L
1/4"	21.0	17.0
3/8"	24.0	17.0
1/2"	27.3	19.0
3/4"	35.0	24.0
1"	42.0	29.0
1-1/4"	52.0	32.0
1-1/2"	57.5	34.0
2"	69.3	38.0
2-1/2"	91.0	43.0
3"	106.0	48.0
4"	133.0	53.0

Полумуфта — Half Coupling / Half Socket

6F018

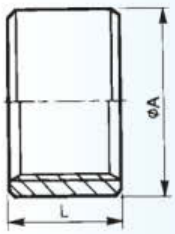

SIZE	ØA	L
1/4"	18.5	11.0
3/8"	21.3	12.0
1/2"	26.4	15.0
3/4"	31.8	17.0
1"	39.5	20.0
1-1/4"	48.3	22.0
1-1/2"	54.5	22.0
2"	69.0	26.0
2-1/2"	87.0	31.0
3"	100.0	34.0
4"	126.0	39.0

Муфта — Coupling / Socket

6F019

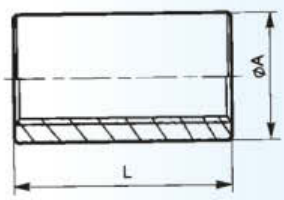

SIZE	ØA	L
1/4"	18.5	25.0
3/8"	21.3	26.0
1/2"	26.4	34.0
3/4"	31.8	36.0
1"	39.5	43.0
1-1/4"	48.3	48.0
1-1/2"	54.5	48.0
2"	69.0	56.0
2-1/2"	87.0	65.0
3"	103.0	71.0
4"	129.5	83.0

INOX PLUS
Петрикань, 17
тел.: 0 22 317 318
моб.: 0 79 317 888
e-mail: office@inoxplus.md
web: www.inoxplus.md

QUICK COUPLINGS

Муфта с наружной резьбой — B Coupler Male Thread

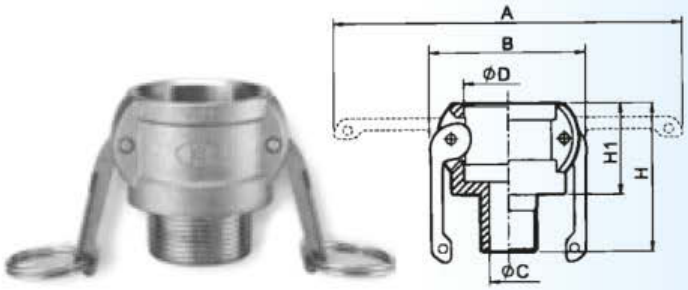

7F001

inch	NW	A	B	C	D	H1	H
1/2	15	115	52	16.5	32.4	32	52
3/4	20	115	52	19.0	32.4	32	52
1	25	137	61	24.0	37.3	39	62
1-1/4	32	183	81	28.0	46.0	48	72
1-1/2	40	191	89	35.0	54.0	49	73
2	50	201	99	48.0	63.7	54	81
2-1/2	65	213	111	58.0	76.4	58	89
3	80	267	137	72.0	92.2	60	93
4	100	296	166	96.0	102.2	63	99
5	150	322	192	117.0	146.0	65	103
6	150	454	258	142.0	176.0	70	113

Муфта с внутренней резьбой — D Coupler Female Thread

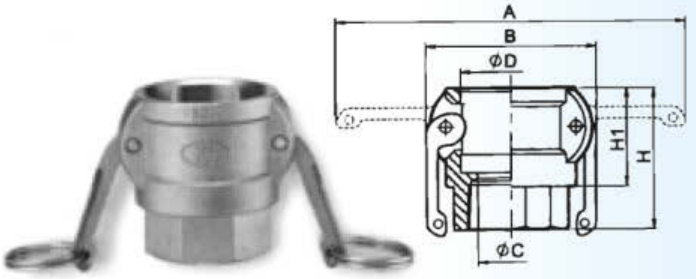

7F002

inch	NW	A	B	C	D	H1	H
1/2	15	115	52	16	32.4	32	52
3/4	20	115	52	19	32.4	32	52
1	25	137	61	26	37.3	39	61
1-1/4	32	183	81	33	46.0	48	68
1-1/2	40	191	89	38	54.0	49	71
2	50	201	99	50	63.7	54	78
2-1/2	65	213	111	61	76.4	58	84
3	80	267	137	75	92.2	60	90
4	100	296	166	100	120.2	63	93
5	150	322	192	125	146.0	65	101
6	150	454	258	150	176.0	70	115

Шланговый адаптор — E Adapter Hose Shank

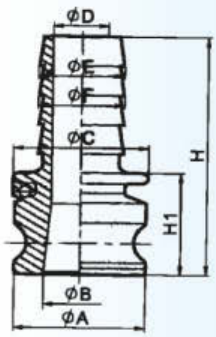

7F003

inch	NW	A	B	C	D	E	F	H1	H
1/2	15	-	-	-	-	-	-	-	-
3/4	20	32.0	21	33	14	21.4	18.6	38	89
1	25	36.7	24	39	20	27.4	25.0	44	104
1-1/4	32	45.5	29	48	25	33.9	31.8	51	111
1-1/2	40	53.4	35	56	31	40.5	37.7	53	119
2	50	63.0	45	66	43	53.2	50.0	58	135
2-1/2	65	75.8	56	80	55	66.7	63.0	64	160
3	80	91.5	67	102	67	79.0	75.0	66	170
4	100	119.5	91	133	91	104.8	100.8	69	182
5	150	145.5	122	158	117	134.0	130.0	73	200
6	150	175.9	148	183	142	155.6	152.4	78	221

Пылезащитный штекер — DP Dust Plug

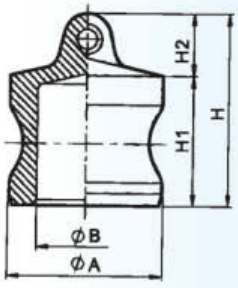

7F004

inch	NW	A	B	H1	H2	H
1/2	15	-	-	-	-	-
3/4	20	32.0	21	25	12	37
1	25	36.7	24	31	14	45
1-1/4	32	45.5	29	38	16	54
1-1/2	40	53.4	35	39	20	59
2	50	63.0	45	43	23	66
2-1/2	65	75.8	56	47	25	72
3	80	91.5	71	48	26	76
4	100	119.5	99	50	30	80
5	150	145.5	122	53	33	86
6	150	175.9	148	60	35	95

INOX PLUS
Петрикань, 17
тел.: 0 22 317 318
моб.: 0 79 317 888
e-mail: office@inoxplus.md
web: www.inoxplus.md

QUICK COUPLINGS

Адаптер с внутренней резьбой — A Adapter Female Thread

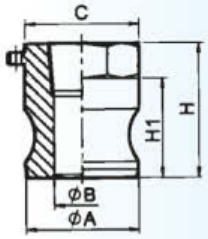

7F005

inch	NW	A	B	C	H1	H
1/2	15	32.0	16	34.0	28	38
3/4	20	32.0	21	34.0	28	38
1	25	36.7	24	41.0	34	47
1-1/4	32	45.5	29	48.0	41	56
1-1/2	40	53.4	36	56.0	43	59
2	50	63.0	45	67.0	48	65
2-1/2	65	75.8	56	83.0	51	87
3	80	91.5	73	96.0	53	73
4	100	119.5	99	127.0	53	78
5	150	145.5	122	168.0	55	79
6	150	175.9	148	192.0	60	86

Адаптер с наружной резьбой — F Adapter Male Thread

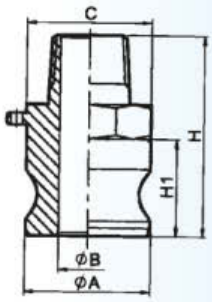

7F006

inch	NW	A	B	C	H1	H
1/2	15	32.0	16.0	34.0	28	58
3/4	20	32.0	21.0	34.0	28	58
1	25	36.7	24.0	41.0	34	70
1-1/4	32	45.5	29.0	48.0	41	80
1-1/2	40	53.4	36.0	56.0	43	83
2	50	63.0	45.5	71.5	48	91
2-1/2	65	75.8	56.0	83.0	51	100
3	80	91.5	73.0	96.0	53	106
4	100	119.5	99.0	127.0	53	114
5	150	145.5	122.0	168.0	55	117
6	150	175.9	146.0	192.0	60	129

Соединитель шланга — C Coupler Hose Shank

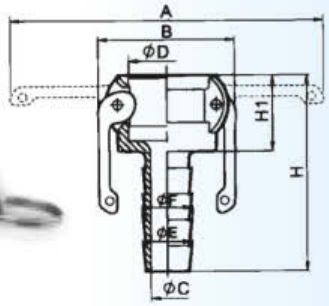

7F007

inch	NW	A	B	C	D	E	F	H1	H
1/2	15	-	-	-	-	-	-	-	-
3/4	20	115	52	14	32.4	21.4	18.6	32	83
1	25	137	61	20	37.3	27.4	25.0	39	99
1-1/4	32	183	81	25	46.0	33.9	31.8	48	112
1-1/2	40	191	89	31	54.0	40.5	37.7	49	115
2	50	201	99	43	63.7	53.2	50.0	54	131
2-1/2	65	213	111	55	76.4	66.7	63.0	58	154
3	80	267	137	67	92.2	79.0	75.0	60	164
4	100	296	166	91	120.2	104.8	100.8	63	176
5	150	322	192	117	146.0	134.0	130.0	65	192
6	150	454	258	142	176.0	155.6	152.4	70	213

Пылезащитный калпак — DC Dust Cup

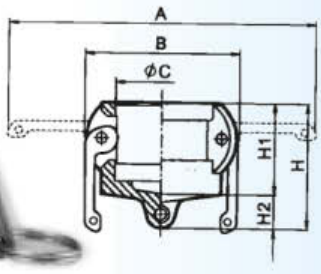

7F008

inch	NW	A	B	C	H1	H2	H
1/2	15	-	-	-	-	-	-
3/4	20	115	52	32.4	32	12	44
1	25	137	61	37.3	39	14	53
1-1/4	32	183	81	46.0	48	16	64
1-1/2	40	191	89	54.0	49	20	69
2	50	201	99	63.7	54	23	77
2-1/2	65	213	111	76.4	58	25	83
3	80	267	137	92.2	60	28	88
4	100	296	166	120.2	63	30	93
5	150	322	192	146.0	65	30	95
6	150	454	258	176.0	70	33	103

Петрикань, 17
тел.: 0 22 317 318
моб.: 0 79 317 888
e-mail: office@inoxplus.md
web: www.inoxplus.md

Stainless Steel

The components we have in stock are made of AISI 304/304L (1,4301/1,4306) and AISI 316L (1,4404). Other materials upon request.

AISI(U.S.A.)	W-Nr GRADE	DIN(Germany)	UNS	SS	AFNOR(France)	BS(Great Britain)	UNI(Italy)
304	1,4301	X5 CrNi 18-10	S 30400	2332	Z6 CN 18.09	304 S 15	X 5 CrNi 1810
304L	1,4306	X2 CrNi 19-11	S 30403	2352	Z2 CN 18.10	304 S 11	X 2 CrNi 1811
304L	1,4307	X2 CrNi 18- 9		2352	Z3 CN 18.10	304 S 11	
316	1,4401	X5CrNiMo 17-12-2	S31600	2347	Z7 CND 17.12.02	316 S 31	X 5 CrNiMo 1712
316	1,4436	X3CrNiMo 17-13-3	S31603	2343	Z7 CND 18.12.03	316 S 31	X 5 CrNiMo 1713
316L	1,4404	X2 CrNiMo 17-12-2		2348	Z3 CND 18.12.02	316 S 11	X 2 CrNiMo 1712
316L	1,4432	X2CrNiMo 17-12-3	S31603	2353	Z3 CND 17.12.03	316 S 13	
316L	1,4435	X2 CrNiMo 18-14-3	S31635	2353	Z3 CND 18.14.03	316 S 11	X 2 CrNiMo 1713
316Ti	1,4571	X6 CrNiMoTi 17-12-2	S31700	2350	Z6 CNDT 17.12	320 S 31	X 6 CrNiMo 1712

All products are delivered with EN 10204 3.1 inspection certificate.

Standards

Tubes : According to DIN 11850, BSP, ISO 1127, SMS 3008, ASTM A270
Fittings : According to DIN 11851, DIN 11852, SMS, BS 4825

Tubes Finish : Internal surface 0,8µm and 1,6µm around the seam
External surface mirror or polished according to DIN 11850 mechanically polished or electropolished

Tubes can be delivered pickled and/or annealed

Fittings and Unions : Internal surface 0,3µm.
External surface mirror or polished

Gaskets material

EPDM	Resistant to most food products. Not resistant to oils and fats. Max +160°C
NBR	Resistant to oils.Not resistant to weathering, moderate to acids,high temperatures and steam. Max +100°C
SILICON	Resistant to low and high temperatures -60°C to +200°C. Good resistance to many products.
VITON	Resistant to organic & non organic oils.Not resistant to steam and low temperature.Temperature -10°C to +200°C.
PFTE	Resistant to all food products.Used mostly in ball valves and clamp. Temperature -200°C to +260°C.

INOX PLUS
Петрикань, 17
тел.: 0 22 317 318
моб.: 0 79 317 888
e-mail: office@inoxplus.md
web: www.inoxplus.md

MAXIMUM PRESSURE FOR TUBES SCHEDULE ASME SA/ASTM A312/ASME B36.19 304/304L & 316L/316Ti

Diameter		Schedule 5 S			Schedule 10 S			Schedule 40 S		
inches	mm	mm	304-316 kg/cm²	304L-316L kg/cm²	mm	304-316 kg/cm²	304L-316L kg/cm²	mm	304-316 kg/cm²	304L-316L kg/cm²
3/8"	17.1				1.65	167	139	2.11	204	169
1/2"	21.3	1.65	135	112	2.11	135	112	2.77	215	177
3/4"	26.7	1.65	107	89	2.11	107	89	2.87	171	142
1"	33.4	1.65	85	71	2.77	85	71	3.38	167	139
1 1/4"	42.4	1.65	68	56	2.77	109	90	3.56	137	114
1 1/2"	48.3	1.65	60	49	2.77	95	79	3.68	119	98
2"	60.3	1.65	48	40	2.77	76	63	3.91	115	90
2 1/2"	73	2.11	49	40	3.05	67	56			
3"	88.9	2.11	40	34	3.05	58	47			
3 1/2"	101.6	2.11	35	29	3.05	51	43			
4"	114.3	2.11	32	26	3.05	46	38			
6"	168.3	2.77	28	23	3.40	35	27			
8"	219.1	2.77	22	18	3.76	30	25			
10"	273	3.40	21	17	4.19	27	22			

1kg/cm²= 0,980665 bar = 0,96784 atm = 1at = 735,56 mmHg = 14,223 psi